§1.5 DIFFERENTIAL GEOMETRY AND RELATIVITY

In this section we will examine some fundamental properties of curves and surfaces. In particular, at each point of a space curve we can construct a moving coordinate system consisting of a tangent vector, a normal vector and a binormal vector which is perpendicular to both the tangent and normal vectors. How these vectors change as we move along the space curve brings up the subjects of curvature and torsion associated with a space curve. The curvature is a measure of how the tangent vector to the curve is changing and the torsion is a measure of the twisting of the curve out of a plane. We will find that straight lines have zero curvature and plane curves have zero torsion.

In a similar fashion, associated with every smooth surface there are two coordinate surface curves and a normal surface vector through each point on the surface. The coordinate surface curves have tangent vectors which together with the normal surface vectors create a set of basis vectors. These vectors can be used to define such things as a two dimensional surface metric and a second order curvature tensor. The coordinate curves have tangent vectors which together with the surface normal form a coordinate system at each point of the surface. How these surface vectors change brings into consideration two different curvatures. A normal curvature and a tangential curvature (geodesic curvature). How these curvatures are related to the curvature tensor and to the Riemann Christoffel tensor, introduced in the last section, as well as other interesting relationships between the various surface vectors and curvatures, is the subject area of differential geometry.

Also presented in this section is a brief introduction to relativity where again the Riemann Christoffel tensor will occur. Properties of this important tensor are developed in the exercises of this section.

Space Curves and Curvature

For $x^i = x^i(s)$,$i = 1, 2, 3$, a 3-dimensional space curve in a Riemannian space V_n with metric tensor g_{ij}, and arc length parameter s, the vector $T^i = \frac{dx^i}{ds}$ represents a tangent vector to the curve at a point P on the curve. The vector T^i is a unit vector because

$$g_{ij}T^iT^j = g_{ij}\frac{dx^i}{ds}\frac{dx^j}{ds} = 1. \tag{1.5.1}$$

Differentiate intrinsically, with respect to arc length, the relation (1.5.1) and verify that

$$g_{ij}T^i\frac{\delta T^j}{\delta s} + g_{ij}\frac{\delta T^i}{\delta s}T^j = 0, \tag{1.5.2}$$

which implies that

$$g_{ij}T^j\frac{\delta T^i}{\delta s} = 0. \tag{1.5.3}$$

Hence, the vector $\frac{\delta T^i}{\delta s}$ is perpendicular to the tangent vector T^i. Define the unit normal vector N^i to the space curve to be in the same direction as the vector $\frac{\delta T^i}{\delta s}$ and write

$$N^i = \frac{1}{\kappa}\frac{\delta T^i}{\delta s} \tag{1.5.4}$$

where κ is a scale factor, called the curvature, and is selected such that

$$g_{ij}N^iN^j = 1 \quad \text{which implies} \quad g_{ij}\frac{\delta T^i}{\delta s}\frac{\delta T^j}{\delta s} = \kappa^2. \tag{1.5.5}$$

The reciprocal of curvature is called the radius of curvature. The curvature measures the rate of change of the tangent vector to the curve as the arc length varies. By differentiating intrinsically, with respect to arc length s, the relation $g_{ij}T^iN^j = 0$ we find that

$$g_{ij}T^i\frac{\delta N^j}{\delta s} + g_{ij}\frac{\delta T^i}{\delta s}N^j = 0. \tag{1.5.6}$$

Consequently, the curvature κ can be determined from the relation

$$g_{ij}T^i\frac{\delta N^j}{\delta s} = -g_{ij}\frac{\delta T^i}{\delta s}N^j = -g_{ij}\kappa N^iN^j = -\kappa \tag{1.5.7}$$

which defines the sign of the curvature. In a similar fashion we differentiate the relation (1.5.5) and find that

$$g_{ij}N^i\frac{\delta N^j}{\delta s} = 0. \tag{1.5.8}$$

This later equation indicates that the vector $\frac{\delta N^j}{\delta s}$ is perpendicular to the unit normal N^i. The equation (1.5.3) indicates that T^i is also perpendicular to N^i and hence any linear combination of these vectors will also be perpendicular to N^i. The unit binormal vector is defined by selecting the linear combination

$$\frac{\delta N^j}{\delta s} + \kappa T^j \tag{1.5.9}$$

and then scaling it into a unit vector by defining

$$B^j = \frac{1}{\tau}\left(\frac{\delta N^j}{\delta s} + \kappa T^j\right) \tag{1.5.10}$$

where τ is a scalar called the torsion. The sign of τ is selected such that the vectors T^i, N^i and B^i form a right handed system with $\epsilon_{ijk}T^iN^jB^k = 1$ and the magnitude of τ is selected such that B^i is a unit vector satisfying

$$g_{ij}B^iB^j = 1. \tag{1.5.11}$$

The triad of vectors T^i, N^i, B^i at a point on the curve form three planes. The plane containing T^i and B^i is called the rectifying plane. The plane containing N^i and B^i is called the normal plane. The plane containing T^i and N^i is called the osculating plane. The reciprocal of the torsion is called the radius of torsion. The torsion measures the rate of change of the osculating plane. The vectors T^i, N^i and B^i form a right-handed orthogonal system at a point on the space curve and satisfy the relation

$$B^i = \epsilon^{ijk}T_jN_k. \tag{1.5.12}$$

By using the equation (1.5.10) it can be shown that B^i is perpendicular to both the vectors T^i and N^i since

$$g_{ij}B^iT^j = 0 \quad \text{and} \quad g_{ij}B^iN^j = 0.$$

It is left as an exercise to show that the binormal vector B^i satisfies the relation $\frac{\delta B^i}{\delta s} = -\tau N^i$. The three relations

$$\begin{aligned}\frac{\delta T^i}{\delta s} &= \kappa N^i\\ \frac{\delta N^i}{\delta s} &= \tau B^i - \kappa T^i\\ \frac{\delta B^i}{\delta s} &= -\tau N^i\end{aligned} \tag{1.5.13}$$

are known as the Frenet-Serret formulas of differential geometry.

Surfaces and Curvature

Let us examine surfaces in a Cartesian frame of reference and then later we can generalize our results to other coordinate systems. A surface in Euclidean 3-dimensional space can be defined in several different ways. Explicitly, $z = f(x, y)$, implicitly, $F(x, y, z) = 0$ or parametrically by defining a set of parametric equations of the form

$$x = x(u, v), \qquad y = y(u, v), \qquad z = z(u, v)$$

which contain two independent parameters u, v called surface coordinates. For example, the equations

$$x = a \sin\theta \cos\phi, \qquad y = a \sin\theta \sin\phi, \qquad z = a \cos\theta$$

are the parametric equations which define a spherical surface of radius a with parameters $u = \theta$ and $v = \phi$. See for example figure 1.3-20 in section 1.3. By eliminating the parameters u, v one can derive the implicit form of the surface and by solving for z one obtains the explicit form of the surface. Using the parametric form of a surface we can define the position vector to a point on the surface which is then represented in terms of the parameters u, v as

$$\vec{r} = \vec{r}(u, v) = x(u, v)\,\widehat{\mathbf{e}}_1 + y(u, v)\,\widehat{\mathbf{e}}_2 + z(u, v)\,\widehat{\mathbf{e}}_3. \tag{1.5.14}$$

The coordinates (u, v) are called the curvilinear coordinates of a point on the surface. The functions $x(u, v), y(u, v), z(u, v)$ are assumed to be real and differentiable such that $\frac{\partial \vec{r}}{\partial u} \times \frac{\partial \vec{r}}{\partial v} \neq 0$. The curves

$$\vec{r}(u, c_2) \qquad \text{and} \qquad \vec{r}(c_1, v) \tag{1.5.15}$$

with c_1, c_2 constants, then define two surface curves called coordinate curves, which intersect at the surface coordinates (c_1, c_2). The family of curves defined by equations (1.5.15) with equally spaced constant values $c_i, c_i + \Delta c_i, c_i + 2\Delta c_i, \ldots$ define a surface coordinate grid system. The vectors $\frac{\partial \vec{r}}{\partial u}$ and $\frac{\partial \vec{r}}{\partial v}$ evaluated at the surface coordinates (c_1, c_2) on the surface, are tangent vectors to the coordinate curves through the point and are basis vectors for any vector lying in the surface. Letting $(x, y, z) = (y^1, y^2, y^3)$ and $(u, v) = (u^1, u^2)$ and utilizing the summation convention, we can write the position vector in the form

$$\vec{r} = \vec{r}(u^1, u^2) = y^i(u^1, u^2)\ \widehat{\mathbf{e}}_i. \tag{1.5.16}$$

The tangent vectors to the coordinate curves at a point P can then be represented as the basis vectors

$$\vec{E}_\alpha = \frac{\partial \vec{r}}{\partial u^\alpha} = \frac{\partial y^i}{\partial u^\alpha}\ \widehat{\mathbf{e}}_i, \quad \alpha = 1, 2 \tag{1.5.17}$$

where the partial derivatives are to be evaluated at the point P where the coordinate curves on the surface intersect. From these basis vectors we construct a unit normal vector to the surface at the point P by calculating the cross product of the tangent vector $\vec{r}_u = \frac{\partial \vec{r}}{\partial u}$ and $\vec{r}_v = \frac{\partial \vec{r}}{\partial v}$. A unit normal is then

$$\widehat{n} = \widehat{n}(u, v) = \frac{\vec{E}_1 \times \vec{E}_2}{|\vec{E}_1 \times \vec{E}_2|} = \frac{\vec{r}_u \times \vec{r}_v}{|\vec{r}_u \times \vec{r}_v|} \tag{1.5.18}$$

and is such that the vectors $\vec{E}_1, \vec{E}_2$ and $\widehat{n}$ form a right-handed system of coordinates.

If we transform from one set of curvilinear coordinates (u, v) to another set $(\bar{u}, \bar{v})$, which are determined by a set of transformation laws

$$u = u(\bar{u}, \bar{v}), \qquad v = v(\bar{u}, \bar{v}),$$

the equation of the surface becomes

$$\vec{r} = \vec{r}(\bar{u}, \bar{v}) = x(u(\bar{u}, \bar{v}), v(\bar{u}, \bar{v}))\,\widehat{\mathbf{e}}_1 + y(u(\bar{u}, \bar{v}), v(\bar{u}, \bar{v}))\,\widehat{\mathbf{e}}_2 + z(u(\bar{u}, \bar{v}), v(\bar{u}, \bar{v}))\,\widehat{\mathbf{e}}_3$$

and the tangent vectors to the new coordinate curves are

$$\frac{\partial \vec{r}}{\partial \bar{u}} = \frac{\partial \vec{r}}{\partial u}\frac{\partial u}{\partial \bar{u}} + \frac{\partial \vec{r}}{\partial v}\frac{\partial v}{\partial \bar{u}} \quad \text{and} \quad \frac{\partial \vec{r}}{\partial \bar{v}} = \frac{\partial \vec{r}}{\partial u}\frac{\partial u}{\partial \bar{v}} + \frac{\partial \vec{r}}{\partial v}\frac{\partial v}{\partial \bar{v}}.$$

Using the indicial notation this result can be represented as

$$\frac{\partial y^i}{\partial \bar{u}^\alpha} = \frac{\partial y^i}{\partial u^\beta}\frac{\partial u^\beta}{\partial \bar{u}^\alpha}.$$

This is the transformation law connecting the two systems of basis vectors on the surface.

A curve on the surface is defined by a relation $f(u, v) = 0$ between the curvilinear coordinates. Another way to represent a curve on the surface is to represent it in a parametric form where $u = u(t)$ and $v = v(t)$, where t is a parameter. The vector

$$\frac{d\vec{r}}{dt} = \frac{\partial \vec{r}}{\partial u}\frac{du}{dt} + \frac{\partial \vec{r}}{\partial v}\frac{dv}{dt}$$

is tangent to the curve on the surface.

An element of arc length with respect to the surface coordinates is represented by

$$ds^2 = d\vec{r} \cdot d\vec{r} = \frac{\partial \vec{r}}{\partial u^\alpha} \cdot \frac{\partial \vec{r}}{\partial u^\beta}\, du^\alpha\, du^\beta = a_{\alpha\beta} du^\alpha du^\beta \tag{1.5.19}$$

where $a_{\alpha\beta} = \frac{\partial \vec{r}}{\partial u^\alpha} \cdot \frac{\partial \vec{r}}{\partial u^\beta}$ with $\alpha, \beta = 1, 2$ defines a surface metric. This element of arc length on the surface is often written as the quadratic form

$$A = ds^2 = E(du)^2 + 2F\,du\,dv + G(dv)^2 = \frac{1}{E}(E\,du + F\,dv)^2 + \frac{EG - F^2}{E}\,dv^2 \tag{1.5.20}$$

and called the first fundamental form of the surface. Observe that for ds^2 to be positive definite the quantities E and $EG - F^2$ must be positive.

The surface metric associated with the two dimensional surface is defined by

$$a_{\alpha\beta} = \vec{E}_\alpha \cdot \vec{E}_\beta = \frac{\partial \vec{r}}{\partial u^\alpha} \cdot \frac{\partial \vec{r}}{\partial u^\beta} = \frac{\partial y^i}{\partial u^\alpha}\frac{\partial y^i}{\partial u^\beta}, \quad \alpha, \beta = 1, 2 \tag{1.5.21}$$

with conjugate metric tensor $a^{\alpha\beta}$ defined such that $a^{\alpha\beta}a_{\beta\gamma} = \delta^\alpha_\gamma$. Here the surface is embedded in a three dimensional space with metric g_{ij} and $a_{\alpha\beta}$ is the two dimensional surface metric. In the equation (1.5.20) the quantities E, F, G are functions of the surface coordinates u, v and are determined from the relations

$$\begin{aligned} E =& a_{11} = \frac{\partial \vec{r}}{\partial u} \cdot \frac{\partial \vec{r}}{\partial u} = \frac{\partial y^i}{\partial u^1}\frac{\partial y^i}{\partial u^1} \\ F =& a_{12} = \frac{\partial \vec{r}}{\partial u} \cdot \frac{\partial \vec{r}}{\partial v} = \frac{\partial y^i}{\partial u^1}\frac{\partial y^i}{\partial u^2} \\ G =& a_{22} = \frac{\partial \vec{r}}{\partial v} \cdot \frac{\partial \vec{r}}{\partial v} = \frac{\partial y^i}{\partial u^2}\frac{\partial y^i}{\partial u^2} \end{aligned} \tag{1.5.22}$$

Here and throughout the remainder of this section, we adopt the convention that Greek letters have the range 1,2, while Latin letters have the range 1,2,3.

Construct at a general point P on the surface the unit normal vector $\widehat{n}$ at this point. Also construct a plane which contains this unit surface normal vector $\widehat{n}$. Observe that there are an infinite number of planes which contain this unit surface normal. For now, select one of these planes, then later on we will consider all such planes. Let $\vec{r} = \vec{r}(s)$ denote the position vector defining a curve C which is the intersection of the selected plane with the surface, where s is the arc length along the curve, which is measured from some fixed point on the curve. Let us find the curvature of this curve of intersection. The vector $\widehat{T} = \frac{d\vec{r}}{ds}$, evaluated at the point P, is a unit tangent vector to the curve C and lies in the tangent plane to the surface at the point P. Here we are using ordinary differentiation rather than intrinsic differentiation because we are in a Cartesian system of coordinates. Differentiating the relation $\widehat{T} \cdot \widehat{T} = 1$, with respect to arc length s we find that $\widehat{T} \cdot \frac{d\widehat{T}}{ds} = 0$ which implies that the vector $\frac{d\widehat{T}}{ds}$ is perpendicular to the tangent vector $\widehat{T}$. Since the coordinate system is Cartesian we can treat the curve of intersection C as a space curve, then the vector $\vec{K} = \frac{d\widehat{T}}{ds}$, evaluated at point P, is defined as the curvature vector with curvature $|\vec{K}| = \kappa$ and radius of curvature $R = 1/\kappa$. A unit normal $\widehat{N}$ to the space curve is taken in the same direction as $\frac{d\widehat{T}}{ds}$ so that the curvature will always be positive. We can then write $\vec{K} = \kappa\widehat{N} = \dfrac{d\widehat{T}}{ds}$. Consider the geometry of figure 1.5-1 and define on the surface a unit vector $\widehat{u} = \widehat{n} \times \widehat{T}$ which is perpendicular to both the surface tangent vector $\widehat{T}$ and the surface normal vector $\widehat{n}$, such that the vectors T^i,u^i and n^i forms a right-handed system.

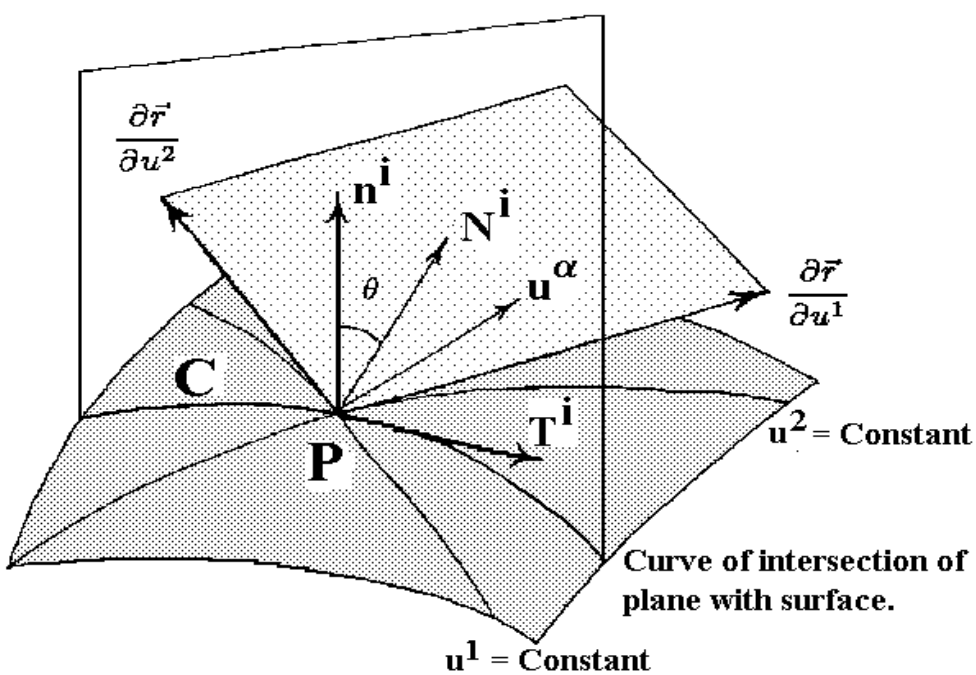

Figure 1.5-1 Surface curve with tangent plane and a normal plane.

The direction of $\widehat{u}$ in relation to $\widehat{T}$ is in the same sense as the surface tangents $\vec{E}_1$ and $\vec{E}_2$. Note that the vector $\frac{d\widehat{T}}{ds}$ is perpendicular to the tangent vector $\widehat{T}$ and lies in the plane which contains the vectors $\widehat{n}$ and $\widehat{u}$. We can therefore write the curvature vector $\vec{K}$ in the component form

$$\vec{K} = \frac{d\widehat{T}}{ds} = \kappa_{(n)}\,\widehat{n} + \kappa_{(g)}\,\widehat{u} = \vec{K}_n + \vec{K}_g \tag{1.5.23}$$

where $\kappa_{(n)}$ is called the normal curvature and $\kappa_{(g)}$ is called the geodesic curvature. The subscripts are not indices. These curvatures can be calculated as follows. From the orthogonality condition $\widehat{n}\cdot\widehat{T} = 0$ we obtain by differentiation with respect to arc length s the result $\widehat{n}\cdot\dfrac{d\widehat{T}}{ds} + \widehat{T}\cdot\dfrac{d\widehat{n}}{ds} = 0$. Consequently, the normal curvature is determined from the dot product relation

$$\widehat{n}\cdot\vec{K} = \kappa_{(n)} = -\widehat{T}\cdot\frac{d\widehat{n}}{ds} = -\frac{d\vec{r}}{ds}\cdot\frac{d\widehat{n}}{ds}. \tag{1.5.24}$$

By taking the dot product of $\widehat{u}$ with equation (1.5.23) we find that the geodesic curvature is determined from the triple scalar product relation

$$\kappa_{(g)} = \widehat{u}\cdot\frac{d\widehat{T}}{ds} = (\widehat{n}\times\widehat{T})\cdot\frac{d\widehat{T}}{ds}. \tag{1.5.25}$$

Normal Curvature

The equation (1.5.24) can be expressed in terms of a quadratic form by writing

$$\kappa_{(n)}\,ds^2 = -d\vec{r}\cdot d\widehat{n}. \tag{1.5.26}$$

The unit normal to the surface $\widehat{n}$ and position vector $\vec{r}$ are functions of the surface coordinates u, v with

$$d\vec{r} = \frac{\partial\vec{r}}{\partial u}du + \frac{\partial\vec{r}}{\partial v}dv \quad \text{and} \quad d\widehat{n} = \frac{\partial\widehat{n}}{\partial u}du + \frac{\partial\widehat{n}}{\partial v}dv. \tag{1.5.27}$$

We define the quadratic form

$$\begin{aligned} B &= -d\vec{r}\cdot d\widehat{n} = -\left(\frac{\partial\vec{r}}{\partial u}du + \frac{\partial\vec{r}}{\partial v}dv\right)\cdot\left(\frac{\partial\widehat{n}}{\partial u}du + \frac{\partial\widehat{n}}{\partial v}dv\right) \\ B &= e(du)^2 + 2f\,du\,dv + g(dv)^2 = b_{\alpha\beta}\,du^\alpha du^\beta \end{aligned} \tag{1.5.28}$$

where

$$e = -\frac{\partial\vec{r}}{\partial u}\cdot\frac{\partial\widehat{n}}{\partial u}, \quad 2f = -\left(\frac{\partial\vec{r}}{\partial u}\cdot\frac{\partial\widehat{n}}{\partial v} + \frac{\partial\widehat{n}}{\partial u}\cdot\frac{\partial\vec{r}}{\partial v}\right), \quad g = -\frac{\partial\vec{r}}{\partial v}\cdot\frac{\partial\widehat{n}}{\partial v} \tag{1.5.29}$$

and $b_{\alpha\beta} \quad \alpha,\beta = 1,2$ is called the curvature tensor and $a^{\alpha\gamma}b_{\alpha\beta} = b^\gamma_\beta$ is an associated curvature tensor. The quadratic form of equation (1.5.28) is called the second fundamental form of the surface. Alternative methods for calculating the coefficients of this quadratic form result from the following considerations. The unit surface normal is perpendicular to the tangent vectors to the coordinate curves at the point P and therefore we have the orthogonality relationships

$$\frac{\partial\vec{r}}{\partial u}\cdot\widehat{n} = 0 \quad \text{and} \quad \frac{\partial\vec{r}}{\partial v}\cdot\widehat{n} = 0. \tag{1.5.30}$$

Observe that by differentiating the relations in equation (1.5.30), with respect to both u and v, one can derive the results

$$\begin{aligned} e &= \frac{\partial^2 \vec{r}}{\partial u^2} \cdot \widehat{n} = -\frac{\partial \vec{r}}{\partial u} \cdot \frac{\partial \widehat{n}}{\partial u} = b_{11} \\ f &= \frac{\partial^2 \vec{r}}{\partial u \partial v} \cdot \widehat{n} = -\frac{\partial \vec{r}}{\partial u} \cdot \frac{\partial \widehat{n}}{\partial v} = -\frac{\partial \widehat{n}}{\partial u} \cdot \frac{\partial \vec{r}}{\partial v} = b_{21} = b_{12} \\ g &= \frac{\partial^2 \vec{r}}{\partial v^2} \cdot \widehat{n} = -\frac{\partial \vec{r}}{\partial v} \cdot \frac{\partial \widehat{n}}{\partial v} = b_{22} \end{aligned} \tag{1.5.31}$$

and consequently the curvature tensor can be expressed as

$$b_{\alpha\beta} = -\frac{\partial \vec{r}}{\partial u^\alpha} \cdot \frac{\partial \widehat{n}}{\partial u^\beta}. \tag{1.5.32}$$

The quadratic forms from equations (1.5.20) and (1.5.28) enable us to represent the normal curvature in the form of a ratio of quadratic forms. We find from equation (1.5.26) that the normal curvature in the direction $\frac{du}{dv}$ is

$$\kappa_{(n)} = \frac{B}{A} = \frac{e(du)^2 + 2f\,du\,dv + g(dv)^2}{E(du)^2 + 2F\,du\,dv + G(dv)^2}. \tag{1.5.33}$$

If we write the unit tangent vector to the curve in the form $\widehat{T} = \frac{d\vec{r}}{ds} = \frac{\partial \vec{r}}{\partial u^\alpha}\frac{du^\alpha}{ds}$ and express the derivative of the unit surface normal with respect to arc length as $\frac{d\widehat{n}}{ds} = \frac{\partial \widehat{n}}{\partial u^\beta}\frac{du^\beta}{ds}$, then the normal curvature can be expressed in the form

$$\begin{aligned} \kappa_{(n)} &= -\widehat{T} \cdot \frac{d\widehat{n}}{ds} = -\left(\frac{\partial \vec{r}}{\partial u^\alpha} \cdot \frac{\partial \widehat{n}}{\partial u^\beta}\right)\frac{du^\alpha}{ds}\frac{du^\beta}{ds} \\ &= \frac{b_{\alpha\beta}du^\alpha du^\beta}{ds^2} = \frac{b_{\alpha\beta}du^\alpha du^\beta}{a_{\alpha\beta}du^\alpha du^\beta}. \end{aligned} \tag{1.5.34}$$

Observe that the curvature tensor is a second order symmetric tensor.

In the previous discussions, the plane containing the unit normal vector was arbitrary. Let us now consider all such planes that pass through this unit surface normal. As we vary the plane containing the unit surface normal $\widehat{n}$ at P we get different curves of intersection with the surface. Each curve has a curvature associated with it. By examining all such planes we can find the maximum and minimum normal curvatures associated with the surface. We write equation (1.5.33) in the form

$$\kappa_{(n)} = \frac{e + 2f\lambda + g\lambda^2}{E + 2F\lambda + G\lambda^2} \tag{1.5.35}$$

where $\lambda = \frac{dv}{du}$. From the theory of proportions we can also write this equation in the form

$$\kappa_{(n)} = \frac{(e + f\lambda) + \lambda(f + g\lambda)}{(E + F\lambda) + \lambda(F + G\lambda)} = \frac{f + g\lambda}{F + G\lambda} = \frac{e + f\lambda}{E + F\lambda}. \tag{1.5.36}$$

Consequently, the curvature κ will satisfy the differential equations

$$(e - \kappa E)du + (f - \kappa F)dv = 0 \quad \text{and} \quad (f - \kappa F)du + (g - \kappa G)dv = 0. \tag{1.5.37}$$

The maximum and minimum curvatures occur in those directions λ where $\frac{d\kappa_{(n)}}{d\lambda} = 0$. Calculating the derivative of $\kappa_{(n)}$ with respect to λ and setting the derivative to zero we obtain a quadratic equation in λ

$$(Fg - Gf)\lambda^2 + (Eg - Ge)\lambda + (Ef - Fe) = 0, \qquad (Fg - Gf) \neq 0.$$

This equation has two roots λ_1 and λ_2 which satisfy

$$\lambda_1 + \lambda_2 = -\frac{Eg - Ge}{Fg - Gf} \qquad \text{and} \qquad \lambda_1\lambda_2 = \frac{Ef - Fe}{Fg - Gf}, \tag{1.5.38}$$

where $Fg - Gf \neq 0$. The curvatures $\kappa_{(1)}$,$\kappa_{(2)}$ corresponding to the roots λ_1 and λ_2 are called the principal curvatures at the point P. Several quantities of interest that are related to $\kappa_{(1)}$ and $\kappa_{(2)}$ are: (1) the principal radii of curvature $R_i = 1/\kappa_i, i = 1, 2$; (2) $H = \frac{1}{2}(\kappa_{(1)} + \kappa_{(2)})$ called the mean curvature and $K = \kappa_{(1)}\kappa_{(2)}$ called the total curvature or Gaussian curvature of the surface. Observe that the roots λ_1 and λ_2 determine two directions on the surface

$$\frac{d\vec{r}_1}{du} = \frac{\partial\vec{r}}{\partial u} + \frac{\partial\vec{r}}{\partial v}\lambda_1 \qquad \text{and} \qquad \frac{d\vec{r}_2}{du} = \frac{\partial\vec{r}}{\partial u} + \frac{\partial\vec{r}}{\partial v}\lambda_2.$$

If these directions are orthogonal we will have

$$\frac{d\vec{r}_1}{du} \cdot \frac{d\vec{r}_2}{du} = (\frac{\partial\vec{r}}{\partial u} + \frac{\partial\vec{r}}{\partial v}\lambda_1)(\frac{\partial\vec{r}}{\partial u} + \frac{\partial\vec{r}}{\partial v}\lambda_2) = 0.$$

This requires that

$$G\lambda_1\lambda_2 + F(\lambda_1 + \lambda_2) + E = 0. \tag{1.5.39}$$

It is left as an exercise to verify that this is indeed the case and so the directions determined by the principal curvatures must be orthogonal. In the case where $Fg - Gf = 0$ we have that $F = 0$ and $f = 0$ because the coordinate curves are orthogonal and G must be positive. In this special case there are still two directions determined by the differential equations (1.5.37) with $dv = 0$, du arbitrary, and $du = 0$, dv arbitrary. From the differential equations (1.5.37) we find these directions correspond to

$$\kappa_{(1)} = \frac{e}{E} \qquad \text{and} \qquad \kappa_{(2)} = \frac{g}{G}.$$

We let $\lambda^\alpha = \frac{du^\alpha}{ds}$ denote a unit vector on the surface satisfying $a_{\alpha\beta}\lambda^\alpha\lambda^\beta = 1$. Then the equation (1.5.34) can be written as $\kappa_{(n)} = b_{\alpha\beta}\lambda^\alpha\lambda^\beta$ or we can write $(b_{\alpha\beta} - \kappa_{(n)}\, a_{\alpha\beta})\lambda^\alpha\lambda^\beta = 0$. The maximum and minimum normal curvature occurs in those directions λ^α where

$$(b_{\alpha\beta} - \kappa_{(n)}\, a_{\alpha\beta})\lambda^\alpha = 0$$

and so $\kappa_{(n)}$ must be a root of the determinant equation $|b_{\alpha\beta} - \kappa_{(n)}\, a_{\alpha\beta}| = 0$ or

$$|a^{\alpha\gamma}b_{\alpha\beta} - \kappa_{(n)}\delta^\gamma_\beta| = \begin{vmatrix} b^1_1 - \kappa_{(n)} & b^1_2 \\ b^2_1 & b^2_2 - \kappa_{(n)} \end{vmatrix} = \kappa^2_{(n)} - b_{\alpha\beta}a^{\alpha\beta}\kappa_{(n)} + \frac{b}{a} = 0. \tag{1.5.40}$$

This is a quadratic equation in $\kappa_{(n)}$ of the form $\kappa^2_{(n)} - (\kappa_{(1)} + \kappa_{(2)})\kappa_{(n)} + \kappa_{(1)}\kappa_{(2)} = 0$. In other words the principal curvatures $\kappa_{(1)}$ and $\kappa_{(2)}$ are the eigenvalues of the matrix with elements $b^\gamma_\beta = a^{\alpha\gamma}b_{\alpha\beta}$. Observe that from the determinant equation in $\kappa_{(n)}$ we can directly find the total curvature or Gaussian curvature which is an invariant given by $K = \kappa_{(1)}\kappa_{(2)} = |b^\alpha_\beta| = |a^{\alpha\gamma}b_{\gamma\beta}| = b/a$. The mean curvature is also an invariant obtained from $H = \frac{1}{2}(\kappa_{(1)} + \kappa_{(2)}) = \frac{1}{2}a^{\alpha\beta}b_{\alpha\beta}$, where $a = a_{11}a_{22} - a_{12}a_{21}$ and $b = b_{11}b_{22} - b_{12}b_{21}$ are the determinants formed from the surface metric tensor and curvature tensor components.

The equations of Gauss, Weingarten and Codazzi

At each point on a space curve we can construct a unit tangent $\vec{T}$, a unit normal $\vec{N}$ and unit binormal $\vec{B}$. The derivatives of these vectors, with respect to arc length, can also be represented as linear combinations of the base vectors $\vec{T}, \vec{N}, \vec{B}$. See for example the Frenet-Serret formulas from equations (1.5.13). In a similar fashion the surface vectors $\vec{r}_u, \vec{r}_v, \widehat{n}$ form a basis and the derivatives of these basis vectors with respect to the surface coordinates u, v can also be expressed as linear combinations of the basis vectors $\vec{r}_u, \vec{r}_v, \widehat{n}$. For example, the derivatives $\vec{r}_{uu}, \vec{r}_{uv}, \vec{r}_{vv}$ can be expressed as linear combinations of $\vec{r}_u, \vec{r}_v, \widehat{n}$. We can write

$$\begin{aligned} \vec{r}_{uu} &= c_1\vec{r}_u + c_2\vec{r}_v + c_3\widehat{n} \\ \vec{r}_{uv} &= c_4\vec{r}_u + c_5\vec{r}_v + c_6\widehat{n} \\ \vec{r}_{vv} &= c_7\vec{r}_u + c_8\vec{r}_v + c_9\widehat{n} \end{aligned} \tag{1.5.41}$$

where $c_1, \ldots, c_9$ are constants to be determined. It is an easy exercise (see exercise 1.5, problem 8) to show that these equations can be written in the indicial notation as

$$\frac{\partial^2 \vec{r}}{\partial u^\alpha \partial u^\beta} = \left\{ \begin{matrix} \gamma \\ \alpha\,\beta \end{matrix} \right\} \frac{\partial \vec{r}}{\partial u^\gamma} + b_{\alpha\beta}\widehat{n}. \tag{1.5.42}$$

These equations are known as the Gauss equations.

In a similar fashion the derivatives of the normal vector can be represented as linear combinations of the surface basis vectors. If we write

$$\begin{aligned} \frac{\partial \widehat{n}}{\partial u} &= c_1\vec{r}_u + c_2\vec{r}_v \\ \frac{\partial \widehat{n}}{\partial v} &= c_3\vec{r}_u + c_4\vec{r}_v \end{aligned} \qquad \text{or} \qquad \begin{aligned} \frac{\partial \vec{r}}{\partial u} &= c_1^*\frac{\partial \widehat{n}}{\partial u} + c_2^*\frac{\partial \widehat{n}}{\partial v} \\ \frac{\partial \vec{r}}{\partial v} &= c_3^*\frac{\partial \widehat{n}}{\partial u} + c_4^*\frac{\partial \widehat{n}}{\partial v} \end{aligned} \tag{1.5.43}$$

where $c_1, \ldots, c_4$ and $c_1^*, \ldots, c_4^*$ are constants. These equations are known as the Weingarten equations. It is easily demonstrated (see exercise 1.5, problem 9) that the Weingarten equations can be written in the indicial form

$$\frac{\partial \widehat{n}}{\partial u^\alpha} = -b_\alpha^\beta \frac{\partial \vec{r}}{\partial u^\beta} \tag{1.5.44}$$

where $b_\alpha^\beta = a^{\beta\gamma} b_{\gamma\alpha}$ is the mixed second order form of the curvature tensor.

The equations of Gauss produce a system of partial differential equations defining the surface coordinates x^i as a function of the curvilinear coordinates u and v. The equations are not independent as certain compatibility conditions must be satisfied. In particular, it is required that the mixed partial derivatives must satisfy

$$\frac{\partial^3 \vec{r}}{\partial u^\alpha \partial u^\beta \partial u^\delta} = \frac{\partial^3 \vec{r}}{\partial u^\alpha \partial u^\delta \partial u^\beta}.$$

We calculate

$$\frac{\partial^3 \vec{r}}{\partial u^\alpha \partial u^\beta \partial u^\delta} = \left\{ \begin{matrix} \gamma \\ \alpha\,\beta \end{matrix} \right\} \frac{\partial^2 \vec{r}}{\partial u^\gamma \partial u^\delta} + \frac{\partial \left\{ \begin{matrix} \gamma \\ \alpha\,\beta \end{matrix} \right\}}{\partial u^\delta} \frac{\partial \vec{r}}{\partial u^\gamma} + b_{\alpha\beta}\frac{\partial \widehat{n}}{\partial u^\delta} + \frac{\partial b_{\alpha\beta}}{\partial u^\delta}\widehat{n}$$

and use the equations of Gauss and Weingarten to express this derivative in the form

$$\frac{\partial^3 \vec{r}}{\partial u^\alpha \partial u^\beta \partial u^\delta} = \left[\frac{\partial \left\{ \begin{matrix} \omega \\ \alpha\,\beta \end{matrix} \right\}}{\partial u^\delta} + \left\{ \begin{matrix} \gamma \\ \alpha\,\beta \end{matrix} \right\} \left\{ \begin{matrix} \omega \\ \gamma\,\delta \end{matrix} \right\} - b_{\alpha\beta} b_\delta^\omega \right] \frac{\partial \vec{r}}{\partial u^\omega} + \left[\left\{ \begin{matrix} \gamma \\ \alpha\,\beta \end{matrix} \right\} b_{\gamma\delta} + \frac{\partial b_{\alpha\beta}}{\partial u^\delta} \right] \widehat{n}.$$

Forming the difference

$$\frac{\partial^3 \vec{r}}{\partial u^\alpha \partial u^\beta \partial u^\delta} - \frac{\partial^3 \vec{r}}{\partial u^\alpha \partial u^\delta \partial u^\beta} = 0$$

we find that the coefficients of the independent vectors $\widehat{n}$ and $\frac{\partial \vec{r}}{\partial u^\omega}$ must be zero. Setting the coefficient of $\widehat{n}$ equal to zero produces the Codazzi equations

$$\left\{ \begin{matrix} \gamma \\ \alpha\,\beta \end{matrix} \right\} b_{\gamma\delta} - \left\{ \begin{matrix} \gamma \\ \alpha\,\delta \end{matrix} \right\} b_{\gamma\beta} + \frac{\partial b_{\alpha\beta}}{\partial u^\delta} - \frac{\partial b_{\alpha\delta}}{\partial u^\beta} = 0. \tag{1.5.45}$$

These equations are sometimes referred to as the Mainardi-Codazzi equations. Equating to zero the coefficient of $\frac{\partial \vec{r}}{\partial u^\omega}$ we find that $R^\delta_{\alpha\gamma\beta} = b_{\alpha\beta} b^\delta_\gamma - b_{\alpha\gamma} b^\delta_\beta$ or changing indices we have the covariant form

$$a_{\omega\delta} R^\delta_{\alpha\beta\gamma} = R_{\omega\alpha\beta\gamma} = b_{\omega\beta} b_{\alpha\gamma} - b_{\omega\gamma} b_{\alpha\beta}, \tag{1.5.46}$$

where

$$R^\delta_{\alpha\gamma\beta} = \frac{\partial}{\partial u^\gamma} \left\{ \begin{matrix} \delta \\ \alpha\,\beta \end{matrix} \right\} - \frac{\partial}{\partial u^\beta} \left\{ \begin{matrix} \delta \\ \alpha\,\gamma \end{matrix} \right\} + \left\{ \begin{matrix} \omega \\ \alpha\,\beta \end{matrix} \right\} \left\{ \begin{matrix} \delta \\ \omega\,\gamma \end{matrix} \right\} - \left\{ \begin{matrix} \omega \\ \alpha\,\gamma \end{matrix} \right\} \left\{ \begin{matrix} \delta \\ \omega\,\beta \end{matrix} \right\} \tag{1.5.47}$$

is the mixed Riemann curvature tensor.

EXAMPLE 1.5-1

Show that the Gaussian or total curvature $K = \kappa_{(1)}\kappa_{(2)}$ depends only upon the metric $a_{\alpha\beta}$ and is $K = \dfrac{R_{1212}}{a}$ where $a = det(a_{\alpha\beta})$.

Solution:

Utilizing the two-dimensional alternating tensor $e^{\alpha\beta}$ and the property of determinants we can write $e^{\gamma\delta} K = e^{\alpha\beta} b^\gamma_\alpha b^\delta_\beta$ where from page 137, $K = |b^\gamma_\beta| = |a^{\alpha\gamma} b_{\alpha\beta}|$. Now multiply by $e_{\gamma\zeta}$ and then contract on ζ and δ to obtain

$$e_{\gamma\delta} e^{\gamma\delta} K = e_{\gamma\delta} e^{\alpha\beta} b^\gamma_\alpha b^\delta_\beta = 2K$$

$$2K = e_{\gamma\delta} e^{\alpha\beta} \left(a^{\gamma\mu} b_{\alpha u}\right) \left(a^{\delta\nu} b_{\beta\nu}\right)$$

But $e_{\gamma\delta} a^{\gamma\mu} a^{\delta\nu} = a e^{\mu\nu}$ so that $2K = e^{\alpha\beta}\, a\, e^{\mu\nu} b_{\alpha\mu} b_{\beta\nu}$. Using $\sqrt{a} e^{\mu\nu} = \epsilon^{\mu\nu}$ we have $2K = \epsilon^{\mu\nu} \epsilon^{\alpha\beta} b_{\alpha\mu} b_{\beta\nu}$. Interchanging indices we can write

$$2K = \epsilon^{\beta\gamma} \epsilon^{\omega\alpha} b_{\omega\beta} b_{\alpha\gamma} \quad \text{and} \quad 2K = \epsilon^{\gamma\beta} \epsilon^{\omega\alpha} b_{\omega\gamma} b_{\alpha\beta}.$$

Adding these last two results we find that $4K = \epsilon^{\beta\gamma} \epsilon^{\omega\gamma} (b_{\omega\beta} b_{\alpha\gamma} - b_{\omega\gamma} b_{\alpha\beta}) = \epsilon^{\beta\gamma} \epsilon^{\omega\gamma} R_{\omega\alpha\beta\gamma}$. Now multiply both sides by $\epsilon_{\sigma\tau} \epsilon_{\lambda\nu}$ to obtain $4K \epsilon_{\sigma\tau} \epsilon_{\lambda\nu} = \delta^{\beta\gamma}_{\sigma\tau} \delta^{\omega\alpha}_{\lambda\nu} R_{\omega\alpha\beta\gamma}$. From exercise 1.5, problem 16, the Riemann curvature tensor R_{ijkl} is skew symmetric in the $(i,j),(k,l)$ as well as being symmetric in the $(ij),(kl)$ pair of indices. Consequently, $\delta^{\beta\gamma}_{\sigma\tau} \delta^{\omega\alpha}_{\lambda\nu} R_{\omega\alpha\beta\gamma} = 4R_{\lambda\nu\sigma\tau}$ and hence $R_{\lambda\nu\sigma\tau} = K \epsilon_{\sigma\tau} \epsilon_{\lambda\nu}$ and we have the special case where $K\sqrt{a} e_{12} \sqrt{a} e_{12} = R_{1212}$ or $K = \dfrac{R_{1212}}{a}$. A much simpler way to obtain this result is to observe $K = \dfrac{b}{a}$ (bottom of page 137) and note from equation (1.5.46) that $R_{1212} = b_{11} b_{22} - b_{12} b_{21} = b$.

■

Note that on a surface $ds^2 = a_{\alpha\beta} du^\alpha du^\beta$ where $a_{\alpha\beta}$ are the metrices for the surface. This metric is a tensor and satisfies $\bar{a}_{\gamma\delta} = a_{\alpha\beta} \dfrac{\partial u^\alpha}{\partial \bar{u}^\gamma} \dfrac{\partial u^\beta}{\partial \bar{u}^\delta}$ and by taking determinants we find

$$\bar{a} = \left|\bar{a}_{\gamma\delta}\right| \left|\frac{\partial u^\alpha}{\partial \bar{u}^\gamma}\right| \left|\frac{\partial u^\beta}{\partial \bar{u}^\delta}\right| = aJ^2$$

where J is the Jacobian of the surface coordinate transformation. Here the curvature tensor for the surface $R_{\alpha\beta\gamma\delta}$ has only one independent component since $R_{1212} = R_{2121} = -R_{1221} = -R_{2112}$ (See exercises 20,21). From the transformation law

$$\bar{R}_{\epsilon\eta\lambda\mu} = R_{\alpha\beta\gamma\delta}\frac{\partial u^\alpha}{\partial \bar{u}^\epsilon}\frac{\partial u^\beta}{\partial \bar{u}^\eta}\frac{\partial u^\gamma}{\partial \bar{u}^\lambda}\frac{\partial u^\delta}{\partial \bar{u}^\mu}$$

one can sum over the repeated indices and show that $\bar{R}_{1212} = R_{1212}J^2$ and consequently

$$\frac{\bar{R}_{1212}}{\bar{a}} = \frac{R_{1212}}{a} = K$$

which shows that the Gaussian curvature is a scalar invariant in V_2.

Geodesic Curvature

For C an arbitrary curve on a given surface the curvature vector $\vec{K}$, associated with this curve, is the vector sum of the normal curvature $\kappa_{(n)}\,\widehat{n}$ and geodesic curvature $\kappa_{(g)}\,\widehat{u}$ and lies in a plane which is perpendicular to the tangent vector to the given curve on the surface. The geodesic curvature $\kappa_{(g)}$ is obtained from the equation (1.5.25) and can be represented

$$\kappa_{(g)} = \widehat{u}\cdot\vec{K} = \widehat{u}\cdot\frac{d\vec{T}}{ds} = (\widehat{n}\times\vec{T})\cdot\frac{d\vec{T}}{ds} = \left(\vec{T}\times\frac{d\vec{T}}{ds}\right)\cdot\widehat{n}.$$

Substituting into this expression the vectors

$$\begin{aligned}\vec{T} &= \frac{d\vec{r}}{ds} = \vec{r}_u\frac{du}{ds} + \vec{r}_v\frac{dv}{ds}\\ \frac{d\vec{T}}{ds} &= \vec{K} = \vec{r}_{uu}(u')^2 + 2\vec{r}_{uv}u'v' + \vec{r}_{vv}(v')^2 + \vec{r}_u u'' + \vec{r}_v v'',\end{aligned}$$

where $' = \frac{d}{ds}$, and by utilizing the results from problem 10 of the exercises following this section, we find that the geodesic curvature can be represented as

$$\begin{aligned}\kappa_{(g)} = \Bigg[&\left\{\begin{matrix}2\\1\,1\end{matrix}\right\}(u')^3 + \left(2\left\{\begin{matrix}2\\1\,2\end{matrix}\right\} - \left\{\begin{matrix}1\\1\,1\end{matrix}\right\}\right)(u')^2v' +\\ &\left(\left\{\begin{matrix}2\\2\,2\end{matrix}\right\} - 2\left\{\begin{matrix}1\\1\,2\end{matrix}\right\}\right)u'(v')^2 - \left\{\begin{matrix}1\\2\,2\end{matrix}\right\}(v')^3 + (u'v'' - u''v')\Bigg]\sqrt{EG-F^2}.\end{aligned} \tag{1.5.48}$$

This equation indicates that the geodesic curvature is only a function of the surface metrices E, F, G and the derivatives u', v', u'', v''. When the geodesic curvature is zero the curve is called a geodesic curve. Such curves are often times, but not always, the lines of shortest distance between two points on a surface. For example, the great circle on a sphere which passes through two given points on the sphere is a geodesic curve. If you erase that part of the circle which represents the shortest distance between two points on the circle you are left with a geodesic curve connecting the two points, however, the path is not the shortest distance between the two points.

For plane curves we let $u = x$ and $v = y$ so that the geodesic curvature reduces to

$$k_g = u'v'' - u''v' = \frac{d\phi}{ds}$$

where ϕ is the angle between the tangent $\vec{T}$ to the curve and the unit vector $\widehat{\mathbf{e}}_1$.

Geodesics are curves on the surface where the geodesic curvature is zero. Since $k_g = 0$ along a geodesic surface curve, then at every point on this surface curve the normal $\vec{N}$ to the curve will be in the same direction as the normal $\widehat{n}$ to the surface. In this case, we have $\vec{r}_u \cdot \widehat{n} = 0$ and $\vec{r}_v \cdot \widehat{n} = 0$ which reduces to

$$\frac{d\vec{T}}{ds} \cdot \vec{r}_u = 0 \quad \text{and} \quad \frac{d\vec{T}}{ds} \cdot \vec{r}_v = 0, \tag{1.5.49}$$

since the vectors $\widehat{n}$ and $\frac{d\vec{T}}{ds}$ have the same direction. In particular, we may write

$$\begin{aligned} \vec{T} &= \frac{d\vec{r}}{ds} = \frac{\partial \vec{r}}{\partial u}\frac{du}{ds} + \frac{\partial \vec{r}}{\partial v}\frac{dv}{ds} = \vec{r}_u\, u' + \vec{r}_v\, v' \\ \frac{d\vec{T}}{ds} &= \vec{r}_{uu}\,(u')^2 + 2\vec{r}_{uv}\, u'v' + \vec{r}_{vv}\,(v')^2 + \vec{r}_u\, u'' + \vec{r}_v\, v'' \end{aligned}$$

Consequently, the equations (1.5.49) become

$$\begin{aligned} \frac{d\vec{T}}{ds} \cdot \vec{r}_u &= (\vec{r}_{uu} \cdot \vec{r}_u)\,(u')^2 + 2(\vec{r}_{uv} \cdot \vec{r}_u)\, u'v' + (\vec{r}_{vv} \cdot \vec{r}_u)\,(v')^2 + Eu'' + Fv'' = 0 \\ \frac{d\vec{T}}{ds} \cdot \vec{r}_v &= (\vec{r}_{uu} \cdot \vec{r}_v)\,(u')^2 + 2(\vec{r}_{uv} \cdot \vec{r}_v)\, u'v' + (\vec{r}_{vv} \cdot \vec{r}_v)\,(v')^2 + Fu'' + Gv'' = 0. \end{aligned} \quad . \tag{1.5.50}$$

Utilizing the results from exercise 1.5,(See problems 4,5 and 6), we can eliminate v'' from the equations (1.5.50) to obtain

$$\frac{d^2u}{ds^2} + \left\{ \begin{matrix} 1 \\ 1\,1 \end{matrix} \right\} \left(\frac{du}{ds}\right)^2 + 2\left\{ \begin{matrix} 1 \\ 1\,2 \end{matrix} \right\} \frac{du}{ds}\frac{dv}{ds} + \left\{ \begin{matrix} 1 \\ 2\,2 \end{matrix} \right\} \left(\frac{dv}{ds}\right)^2 = 0$$

and eliminating u'' from the equations (1.5.50) produces the equation

$$\frac{d^2v}{ds^2} + \left\{ \begin{matrix} 2 \\ 1\,1 \end{matrix} \right\} \left(\frac{du}{ds}\right)^2 + 2\left\{ \begin{matrix} 2 \\ 1\,2 \end{matrix} \right\} \frac{du}{ds}\frac{dv}{ds} + \left\{ \begin{matrix} 2 \\ 2\,2 \end{matrix} \right\} \left(\frac{dv}{ds}\right)^2 = 0.$$

In tensor form, these last two equations are written

$$\frac{d^2u^\alpha}{ds^2} + \left\{ \begin{matrix} \alpha \\ \beta\,\gamma \end{matrix} \right\}_a \frac{du^\beta}{ds}\frac{du^\gamma}{ds} = 0, \quad \alpha, \beta, \gamma = 1, 2 \tag{1.5.51}$$

where $u = u^1$ and $v = u^2$. The equations (1.5.51) are the differential equations defining a geodesic curve on a surface. We will find that these same type of equations arise in considering the shortest distance between two points in a generalized coordinate system. See for example problem 18 in exercise 2.2.

Tensor Derivatives

Let $u^\alpha = u^\alpha(t)$ denote the parametric equations of a curve on the surface defined by the parametric equations $x^i = x^i(u^1, u^2)$. We can then represent the surface curve in the spatial geometry since the surface curve can be represented in the spatial coordinates through the representation $x^i = x^i(u^1(t), u^2(t)) = x^i(t)$. Recall that for $x^i = x^i(t)$ a given curve C , the intrinsic derivative of a vector field A^i along C is defined as the inner product of the covariant derivative of the vector field with the tangent vector to the curve. This intrinsic derivative is written

$$\frac{\delta A^i}{\delta t} = A^i_{,j}\frac{dx^j}{dt} = \left[\frac{\partial A^i}{\partial x^j} + \left\{ \begin{matrix} i \\ j\,k \end{matrix} \right\}_g A^k\right]\frac{dx^j}{dt}$$

or

$$\frac{\delta A^i}{\delta t} = \frac{dA^i}{dt} + \left\{ \begin{matrix} i \\ j\,k \end{matrix} \right\}_g A^k\frac{dx^j}{dt}$$

where the subscript g indicates that the Christoffel symbol is formed from the spatial metric g_{ij}. If A^α is a surface vector defined along the curve C, the intrinsic derivative is represented

$$\frac{\delta A^\alpha}{\delta t} = A^\alpha_{,\beta}\frac{du^\beta}{dt} = \left[\frac{\partial A^\alpha}{\partial u^\beta} + \left\{ \begin{matrix} \alpha \\ \beta\,\gamma \end{matrix} \right\}_a A^\gamma\right]\frac{du^\beta}{dt}$$

or

$$\frac{\delta A^\alpha}{\delta t} = \frac{dA^\alpha}{dt} + \left\{ \begin{matrix} \alpha \\ \beta\,\gamma \end{matrix} \right\}_a A^\gamma\frac{du^\beta}{dt}$$

where the subscript a denotes that the Christoffel is formed from the surface metric $a_{\alpha\beta}$.

Similarly, the formulas for the intrinsic derivative of a covariant spatial vector A_i or covariant surface vector A_α are given by

$$\frac{\delta A_i}{\delta t} = \frac{dA_i}{dt} - \left\{ \begin{matrix} k \\ i\,j \end{matrix} \right\}_g A_k\frac{dx^j}{dt}$$

and

$$\frac{\delta A_\alpha}{\delta t} = \frac{dA_\alpha}{dt} - \left\{ \begin{matrix} \gamma \\ \alpha\,\beta \end{matrix} \right\}_a A_\alpha\frac{du^\beta}{dt}.$$

Consider a mixed tensor T^i_α which is contravariant with respect to a transformation of space coordinates x^i and covariant with respect to a transformation of surface coordinates u^α. For T^i_α defined over the surface curve C, which can also be viewed as a space curve C, define the scalar invariant $\Psi = \Psi(t) = T^i_\alpha A_i B^\alpha$ where A_i is a parallel vector field along the curve C when it is viewed as a space curve and B^α is also a parallel vector field along the curve C when it is viewed as a surface curve. Recall that these parallel vector fields must satisfy the differential equations

$$\frac{\delta A_i}{\delta t} = \frac{dA_i}{dt} - \left\{ \begin{matrix} k \\ i\,j \end{matrix} \right\}_g A_k\frac{dx^j}{dt} = 0 \quad \text{and} \quad \frac{\delta B^\alpha}{\delta t} = \frac{dB^\alpha}{dt} + \left\{ \begin{matrix} \alpha \\ \beta\,\gamma \end{matrix} \right\}_a B^\gamma\frac{du^\beta}{dt} = 0. \tag{1.5.52}$$

The scalar invariant Ψ is a function of the parameter t of the space curve since both the tensor and the parallel vector fields are to be evaluated along the curve C. By differentiating the function Ψ with respect to the parameter t there results

$$\frac{d\Psi}{dt} = \frac{dT^i_\alpha}{dt}A_i B^\alpha + T^i_\alpha\frac{dA_i}{dt}B^\alpha + T^i_\alpha A_i\frac{dB^\alpha}{dt}. \tag{1.5.53}$$

But the vectors A_i and B^α are parallel vector fields and must satisfy the relations given by equations (1.5.52). This implies that equation (1.5.53) can be written in the form

$$\frac{d\Psi}{dt} = \left[\frac{dT^i_\alpha}{dt} + \left\{ {i \atop k\,j} \right\}_g T^k_\alpha \frac{dx^j}{dt} - \left\{ {\gamma \atop \beta\,\alpha} \right\}_a T^i_\gamma \frac{du^\beta}{dt}\right] A_i B^\alpha. \tag{1.5.54}$$

The quantity inside the brackets of equation (1.5.54) is defined as the intrinsic tensor derivative with respect to the parameter t along the curve C. This intrinsic tensor derivative is written

$$\frac{\delta T^i_\alpha}{dt} = \frac{dT^i_\alpha}{dt} + \left\{ {i \atop k\,j} \right\}_g T^k_\alpha \frac{dx^j}{dt} - \left\{ {\gamma \atop \beta\,\alpha} \right\}_a T^i_\gamma \frac{du^\beta}{dt}. \tag{1.5.55}$$

The spatial representation of the curve C is related to the surface representation of the curve C through the defining equations. Therefore, we can express the equation (1.5.55) in the form

$$\frac{\delta T^i_\alpha}{dt} = \left[\frac{\partial T^i_\alpha}{\partial u^\beta} + \left\{ {i \atop k\,j} \right\}_g T^k_\alpha \frac{\partial x^j}{\partial u^\beta} - \left\{ {\gamma \atop \beta\,\alpha} \right\}_a T^i_\gamma\right] \frac{du^\beta}{dt} \tag{1.5.56}$$

The quantity inside the brackets is a mixed tensor which is defined as the tensor derivative of T^i_α with respect to the surface coordinates u^β. The tensor derivative of the mixed tensor T^i_α with respect to the surface coordinates u^β is written

$$T^i_{\alpha,\beta} = \frac{\partial T^i_\alpha}{\partial u^\beta} + \left\{ {i \atop k\,j} \right\}_g T^k_\alpha \frac{\partial x^j}{\partial u^\beta} - \left\{ {\gamma \atop \beta\,\alpha} \right\}_a T^i_\gamma.$$

In general, given a mixed tensor $T^{i\cdots j}_{\alpha\ldots\beta}$ which is contravariant with respect to transformations of the space coordinates and covariant with respect to transformations of the surface coordinates, then we can define the scalar field along the surface curve C as

$$\Psi(t) = T^{i\cdots j}_{\alpha\ldots\beta} A_i \cdots A_j B^\alpha \cdots B^\beta \tag{1.5.57}$$

where $A_i, \ldots, A_j$ and $B^\alpha, \ldots, B^\beta$ are parallel vector fields along the curve C. The intrinsic tensor derivative is then derived by differentiating the equation (1.5.57) with respect to the parameter t.

Tensor derivatives of the metric tensors $g_{ij}, a_{\alpha\beta}$ and the alternating tensors $\epsilon_{ijk}, \epsilon_{\alpha\beta}$ and their associated tensors are all zero. Hence, they can be treated as constants during the tensor differentiation process.

Generalizations

In a Riemannian space V_n with metric g_{ij} and curvilinear coordinates $x^i, i = 1, 2, 3$, the equations of a surface can be written in the parametric form $x^i = x^i(u^1, u^2)$ where $u^\alpha, \alpha = 1, 2$ are called the curvilinear coordinates of the surface. Since

$$dx^i = \frac{\partial x^i}{\partial u^\alpha} du^\alpha \tag{1.5.58}$$

then a small change du^α on the surface results in change dx^i in the space coordinates. Hence an element of arc length on the surface can be represented in terms of the curvilinear coordinates of the surface. This same element of arc length can also be represented in terms of the curvilinear coordinates of the space. Thus, an element of arc length squared in terms of the surface coordinates is represented

$$ds^2 = a_{\alpha\beta} du^\alpha du^\beta \tag{1.5.59}$$

where $a_{\alpha\beta}$ is the metric of the surface. This same element when viewed as a spatial element is represented

$$ds^2 = g_{ij}dx^i dx^j. \tag{1.5.60}$$

By equating the equations (1.5.59) and (1.5.60) we find that

$$g_{ij}dx^i dx^j = g_{ij}\frac{\partial x^i}{\partial u^\alpha}\frac{\partial x^j}{\partial u^\beta}du^\alpha du^\beta = a_{\alpha\beta}du^\alpha du^\beta. \tag{1.5.61}$$

The equation (1.5.61) shows that the surface metric is related to the spatial metric and can be calculated from the relation $a_{\alpha\beta} = g_{ij}\dfrac{\partial x^i}{\partial u^\alpha}\dfrac{\partial x^j}{\partial u^\beta}$. This equation reduces to the equation (1.5.21) in the special case of Cartesian coordinates. In the surface coordinates we define the quadratic form $A = a_{\alpha\beta}du^\alpha du^\beta$ as the first fundamental form of the surface. The tangent vector to the coordinate curves defining the surface are given by $\frac{\partial x^i}{\partial u^\alpha}$ and can be viewed as either a covariant surface vector or a contravariant spatial vector. We define this vector as

$$x^i_\alpha = \frac{\partial x^i}{\partial u^\alpha}, \qquad i = 1, 2, 3, \quad \alpha = 1, 2. \tag{1.5.62}$$

Any vector which is a linear combination of the tangent vectors to the coordinate curves is called a surface vector. A surface vector A^α can also be viewed as a spatial vector A^i. The relation between the spatial representation and surface representation is $A^i = A^\alpha x^i_\alpha$. The surface representation $A^\alpha, \alpha = 1, 2$ and the spatial representation $A^i, i = 1, 2, 3$ define the same direction and magnitude since

$$g_{ij}A^i A^j = g_{ij}A^\alpha x^i_\alpha A^\beta x^j_\beta = g_{ij}x^i_\alpha x^j_\beta A^\alpha A^\beta = a_{\alpha\beta}A^\alpha A^\beta.$$

Consider any two surface vectors A^α and B^α and their spatial representations A^i and B^i where

$$A^i = A^\alpha x^i_\alpha \qquad \text{and} \qquad B^i = B^\alpha x^i_\alpha. \tag{1.5.63}$$

These vectors are tangent to the surface and so a unit normal vector to the surface can be defined from the cross product relation

$$n_i AB\sin\theta = \epsilon_{ijk}A^j B^k \tag{1.5.64}$$

where A, B are the magnitudes of A^i, B^i and θ is the angle between the vectors when their origins are made to coincide. Substituting equations (1.5.63) into the equation (1.5.64) we find

$$n_i AB\sin\theta = \epsilon_{ijk}A^\alpha x^j_\alpha B^\beta x^k_\beta. \tag{1.5.65}$$

In terms of the surface metric we have $AB\sin\theta = \epsilon_{\alpha\beta}A^\alpha B^\beta$ so that equation (1.5.65) can be written in the form

$$(n_i\epsilon_{\alpha\beta} - \epsilon_{ijk}x^j_\alpha x^k_\beta)A^\alpha B^\beta = 0 \tag{1.5.66}$$

which for arbitrary surface vectors implies

$$n_i\epsilon_{\alpha\beta} = \epsilon_{ijk}x^j_\alpha x^k_\beta \quad \text{or} \quad n_i = \frac{1}{2}\epsilon^{\alpha\beta}\epsilon_{ijk}x^j_\alpha x^k_\beta. \tag{1.5.67}$$

The equation (1.5.67) defines a unit normal vector to the surface in terms of the tangent vectors to the coordinate curves. This unit normal vector is related to the covariant derivative of the surface tangents as

is now demonstrated. By using the results from equation (1.5.50), the tensor derivative of equation (1.5.59), with respect to the surface coordinates, produces

$$x^i_{\alpha,\beta} = \frac{\partial^2 x^i}{\partial u^\alpha \partial u^\beta} + \left\{ \begin{matrix} i \\ p\,q \end{matrix} \right\}_g x^p_\alpha x^q_\beta - \left\{ \begin{matrix} \sigma \\ \alpha\,\beta \end{matrix} \right\}_a x^i_\sigma \tag{1.5.68}$$

where the subscripts on the Christoffel symbols refer to the metric from which they are calculated. Also the tensor derivative of the equation (1.5.57) produces the result

$$g_{ij} x^i_{\alpha,\gamma} x^j_\beta + g_{ij} x^i_\alpha x^j_{\beta,\gamma} = a_{\alpha\beta,\gamma} = 0. \tag{1.5.69}$$

Interchanging the indices α, β, γ cyclically in the equation (1.5.69) one can verify that

$$g_{ij} x^i_{\alpha,\beta} x^j_\gamma = 0. \tag{1.5.70}$$

The equation (1.5.70) indicates that in terms of the space coordinates, the vector $x^i_{\alpha,\beta}$ is perpendicular to the surface tangent vector x^i_γ and so must have the same direction as the unit surface normal n^i. Therefore, there must exist a second order tensor $b_{\alpha\beta}$ such that

$$b_{\alpha\beta} n^i = x^i_{\alpha,\beta}. \tag{1.5.71}$$

By using the relation $g_{ij} n^i n^j = 1$ we can transform equation (1.5.71) to the form

$$b_{\alpha\beta} = g_{ij} n^j x^i_{\alpha,\beta} = \frac{1}{2} \epsilon^{\gamma\delta} \epsilon_{ijk} x^i_{\alpha,\beta} x^j_\gamma x^k_\delta. \tag{1.5.72}$$

The second order symmetric tensor $b_{\alpha\beta}$ is called the curvature tensor and the quadratic form

$$B = b_{\alpha\beta} du^\alpha du^\beta \tag{1.5.73}$$

is called the second fundamental form of the surface.

Consider also the tensor derivative with respect to the surface coordinates of the unit normal vector to the surface. This derivative is

$$n^i_{,\alpha} = \frac{\partial n^i}{\partial u^\alpha} + \left\{ \begin{matrix} i \\ j\,k \end{matrix} \right\}_g n^j x^k_\alpha. \tag{1.5.74}$$

Taking the tensor derivative of $g_{ij} n^i n^j = 1$ with respect to the surface coordinates produces the result $g_{ij} n^i n^j_{,\alpha} = 0$ which shows that the vector $n^j_{,\alpha}$ is perpendicular to n^i and must lie in the tangent plane to the surface. It can therefore be expressed as a linear combination of the surface tangent vectors x^i_α and written in the form

$$n^i_{,\alpha} = \eta^\beta_\alpha x^i_\beta \tag{1.5.75}$$

where the coefficients η^β_α can be written in terms of the surface metric components $a_{\alpha\beta}$ and the curvature components $b_{\alpha\beta}$ as follows. The unit vector n^i is normal to the surface so that

$$g_{ij} n^i x^j_\alpha = 0. \tag{1.5.76}$$

The tensor derivative of this equation with respect to the surface coordinates gives

$$g_{ij}n^i_\beta x^j_\alpha + g_{ij}n^i x^j_{\alpha,\beta} = 0. \tag{1.5.77}$$

Substitute into equation (1.5.77) the relations from equations (1.5.57), (1.5.71) and (1.5.75) and show that

$$b_{\alpha\beta} = -a_{\alpha\gamma}\eta^\gamma_\beta. \tag{1.5.78}$$

Solving the equation (1.5.78) for the coefficients η^γ_β we find

$$\eta^\gamma_\beta = -a^{\alpha\gamma}b_{\alpha\beta}. \tag{1.5.79}$$

Now substituting equation (1.5.79) into the equation (1.5.75) produces the Weingarten formula

$$n^i_{,\alpha} = -a^{\gamma\beta}b_{\gamma\alpha}x^i_\beta. \tag{1.5.80}$$

This is a relation for the derivative of the unit normal in terms of the surface metric, curvature tensor and surface tangents.

A third fundamental form of the surface is given by the quadratic form

$$C = c_{\alpha\beta}du^\alpha du^\beta \tag{1.5.81}$$

where $c_{\alpha\beta}$ is defined as the symmetric surface tensor

$$c_{\alpha\beta} = g_{ij}n^i_{,\alpha}n^j_{,\beta}. \tag{1.5.82}$$

By using the Weingarten formula in the equation (1.5.81) one can verify that

$$c_{\alpha\beta} = a^{\gamma\delta}b_{\alpha\gamma}b_{\beta\delta}. \tag{1.5.83}$$

Geodesic Coordinates

In a Cartesian coordinate system the metric tensor g_{ij} is a constant and consequently the Christoffel symbols are zero at all points of the space. This is because the Christoffel symbols are dependent upon the derivatives of the metric tensor which is constant. If the space V_N is not Cartesian then the Christoffel symbols do not vanish at all points of the space. However, it is possible to find a coordinate system where the Christoffel symbols will all vanish at a given point P of the space. Such coordinates are called geodesic coordinates of the point P.

Consider a two dimensional surface with surface coordinates u^α and surface metric $a_{\alpha\beta}$. If we transform to some other two dimensional coordinate system, say $\bar{u}^\alpha$ with metric $\bar{a}_{\alpha\beta}$, where the two coordinates are related by transformation equations of the form

$$u^\alpha = u^\alpha(\bar{u}^1, \bar{u}^2), \quad \alpha = 1, 2, \tag{1.5.84}$$

then from the transformation equation (1.4.7) we can write, after changing symbols,

$$\left\{ \begin{matrix} \delta \\ \beta\,\gamma \end{matrix} \right\}_{\bar{a}} \frac{\partial u^\alpha}{\partial \bar{u}^{\,\delta}} = \left\{ \begin{matrix} \alpha \\ \delta\,\epsilon \end{matrix} \right\}_{a} \frac{\partial u^\delta}{\partial \bar{u}^{\,\beta}} \frac{\partial u^\epsilon}{\partial \bar{u}^{\,\gamma}} + \frac{\partial^2 u^\alpha}{\partial \bar{u}^{\,\beta} \partial \bar{u}^{\,\gamma}}. \tag{1.5.85}$$

This is a relationship between the Christoffel symbols in the two coordinate systems. If $\left\{ \begin{matrix} \delta \\ \beta\,\gamma \end{matrix} \right\}_{\bar{a}}$ vanishes at a point P, then for that particular point the equation (1.5.85) reduces to

$$\frac{\partial^2 u^\alpha}{\partial \bar{u}^{\,\beta} \partial \bar{u}^{\,\gamma}} = -\left\{ \begin{matrix} \alpha \\ \delta\,\epsilon \end{matrix} \right\}_{a} \frac{\partial u^\delta}{\partial \bar{u}^{\,\beta}} \frac{\partial u^\epsilon}{\partial \bar{u}^{\,\gamma}} \tag{1.5.86}$$

where all terms are evaluated at the point P. Conversely, if the equation (1.5.86) is satisfied at the point P, then the Christoffel symbol $\left\{ \begin{matrix} \delta \\ \beta\,\gamma \end{matrix} \right\}_{\bar{a}}$ must be zero at this point. Consider the special coordinate transformation

$$u^\alpha = u_0^\alpha + \bar{u}^{\,\alpha} - \frac{1}{2} \left\{ \begin{matrix} \alpha \\ \beta\,\gamma \end{matrix} \right\}_{a} \bar{u}^{\,\beta} \bar{u}^{\,\alpha} \tag{1.5.87}$$

where u_0^α are the surface coordinates of the point P. The point P in the new coordinates is given by $\bar{u}^{\,\alpha} = 0$. We now differentiate the relation (1.5.87) to see if it satisfies the equation (1.5.86). We calculate the derivatives

$$\frac{\partial u^\alpha}{\partial \bar{u}^{\,\tau}} = \delta^\alpha_\tau - \frac{1}{2} \left\{ \begin{matrix} \alpha \\ \beta\,\tau \end{matrix} \right\}_{a} \bar{u}^\beta - \frac{1}{2} \left\{ \begin{matrix} \alpha \\ \tau\,\gamma \end{matrix} \right\}_{a} \bar{u}^\gamma \Big|_{u^\alpha = 0} \tag{1.5.88}$$

and

$$\frac{\partial^2 u^\alpha}{\partial \bar{u}^{\,\tau} \partial \bar{u}^{\,\sigma}} = -\left\{ \begin{matrix} \alpha \\ \tau\,\sigma \end{matrix} \right\}_{a} \Big|_{u^\alpha = 0} \tag{1.5.89}$$

where these derivative are evaluated at $\bar{u}^{\,\alpha} = 0$. We find the derivative equations (1.5.88) and (1.5.89) do satisfy the equation (1.5.86) locally at the point P. Hence, the Christoffel symbols will all be zero at this particular point. The new coordinates can then be called geodesic coordinates.

Riemann Christoffel Tensor

Consider the Riemann Christoffel tensor defined by the equation (1.4.33). Various properties of this tensor are derived in the exercises at the end of this section. We will be particularly interested in the Riemann Christoffel tensor in a two dimensional space with metric $a_{\alpha\beta}$ and coordinates u^α. We find the Riemann Christoffel tensor has the form

$$R^\delta_{\cdot\,\alpha\beta\gamma} = \frac{\partial}{\partial u^\beta} \left\{ \begin{matrix} \delta \\ \alpha\,\gamma \end{matrix} \right\} - \frac{\partial}{\partial u^\gamma} \left\{ \begin{matrix} \delta \\ \alpha\,\beta \end{matrix} \right\} + \left\{ \begin{matrix} \tau \\ \alpha\,\gamma \end{matrix} \right\} \left\{ \begin{matrix} \delta \\ \beta\,\tau \end{matrix} \right\} - \left\{ \begin{matrix} \tau \\ \alpha\,\beta \end{matrix} \right\} \left\{ \begin{matrix} \delta \\ \gamma\,\tau \end{matrix} \right\} \tag{1.5.90}$$

where the Christoffel symbols are evaluated with respect to the surface metric. The above tensor has the associated tensor

$$R_{\sigma\alpha\beta\gamma} = a_{\sigma\delta} R^\delta_{\cdot\,\alpha\beta\gamma} \tag{1.5.91}$$

which is skew-symmetric in the indices (σ, α) and (β, γ) such that

$$R_{\sigma\alpha\beta\gamma} = -R_{\alpha\sigma\beta\gamma} \qquad \text{and} \qquad R_{\sigma\alpha\beta\gamma} = -R_{\sigma\alpha\gamma\beta}. \tag{1.5.92}$$

The two dimensional alternating tensor is used to define the constant

$$K = \frac{1}{4} \epsilon^{\alpha\beta} \epsilon^{\gamma\delta} R_{\alpha\beta\gamma\delta} \tag{1.5.93}$$

(see example 1.5-1) which is an invariant of the surface and called the Gaussian curvature or total curvature. In the exercises following this section it is shown that the Riemann Christoffel tensor of the surface can be expressed in terms of the total curvature and the alternating tensors as

$$R_{\alpha\beta\gamma\delta} = K\epsilon_{\alpha\beta}\epsilon_{\gamma\delta}. \tag{1.5.94}$$

Consider the second tensor derivative of x^r_α which is given by

$$x^r_{\alpha,\beta\gamma} = \frac{\partial x^r_{\alpha,\beta}}{\partial u^\gamma} + \left\{ \begin{matrix} r \\ m\,n \end{matrix} \right\}_g x^r_{\alpha,\beta} x^n_\gamma - \left\{ \begin{matrix} \delta \\ \alpha\,\gamma \end{matrix} \right\}_a x^r_{\delta,\beta} - \left\{ \begin{matrix} \delta \\ \beta\,\gamma \end{matrix} \right\}_a x^r_{\alpha,\gamma} \tag{1.5.95}$$

which can be shown to satisfy the relation

$$x^r_{\alpha,\beta\gamma} - x^r_{\alpha,\gamma\beta} = R^\delta_{.\alpha\beta\gamma} x^r_\delta. \tag{1.5.96}$$

Using the relation (1.5.96) we can now derive some interesting properties relating to the tensors $a_{\alpha\beta}, b_{\alpha\beta}$, $c_{\alpha\beta}$, $R_{\alpha\beta\gamma\delta}$, the mean curvature H and the total curvature K.

Consider the tensor derivative of the equation (1.5.71) which can be written

$$x^i_{\alpha,\beta\gamma} = b_{\alpha\beta,\gamma} n^i + b_{\alpha\beta} n^i_{,\gamma} \tag{1.5.97}$$

where

$$b_{\alpha\beta,\gamma} = \frac{\partial b_{\alpha\beta}}{\partial u^\alpha} - \left\{ \begin{matrix} \sigma \\ \alpha\,\gamma \end{matrix} \right\}_a b_{\sigma\beta} - \left\{ \begin{matrix} \sigma \\ \beta\,\gamma \end{matrix} \right\}_a b_{\alpha\sigma}. \tag{1.5.98}$$

By using the Weingarten formula, given in equation (1.5.80), the equation (1.5.97) can be expressed in the form

$$x^i_{\alpha,\beta\gamma} = b_{\alpha\beta,\gamma} n^i - b_{\alpha\beta} a^{\tau\sigma} b_{\tau\gamma} x^i_\sigma \tag{1.5.99}$$

and by using the equations (1.5.98) and (1.5.99) it can be established that

$$x^r_{\alpha,\beta\gamma} - x^r_{\alpha,\gamma\beta} = (b_{\alpha\beta,\gamma} - b_{\alpha\gamma,\beta}) n^r - a^{\tau\delta}(b_{\alpha\beta} b_{\tau\gamma} - b_{\alpha\gamma} b_{\tau\beta}) x^r_\delta. \tag{1.5.100}$$

Now by equating the results from the equations (1.5.96) and (1.5.100) we arrive at the relation

$$R^\delta_{.\alpha\beta\gamma} x^r_\delta = (b_{\alpha\beta,\gamma} - b_{\alpha\gamma,\beta}) n^r - a^{\tau\delta}(b_{\alpha\beta} b_{\tau\gamma} - b_{\alpha\gamma} b_{\tau\beta}) x^r_\delta. \tag{1.5.101}$$

Multiplying the equation (1.5.101) by n_r and using the results from the equation (1.5.76) there results the Codazzi equations

$$b_{\alpha\beta,\gamma} - b_{\alpha\gamma,\beta} = 0. \tag{1.5.102}$$

Multiplying the equation (1.5.101) by $g_{rm} x^m_\sigma$ and simplifying one can derive the Gauss equations of the surface

$$R_{\sigma\alpha\beta\gamma} = b_{\alpha\gamma} b_{\sigma\beta} - b_{\alpha\beta} b_{\sigma\gamma}. \tag{1.5.103}$$

By using the Gauss equations (1.5.103) the equation (1.5.94) can be written as

$$K\epsilon_{\sigma\alpha}\epsilon_{\beta\gamma} = b_{\alpha\gamma} b_{\sigma\beta} - b_{\alpha\beta} b_{\sigma\gamma}. \tag{1.5.104}$$

Another form of equation (1.5.104) is obtained by using the equation (1.5.83) together with the relation $a_{\alpha\beta} = -a^{\sigma\gamma}\epsilon_{\sigma\alpha}\epsilon_{\beta\gamma}$. It is left as an exercise to verify the resulting form

$$-K a_{\alpha\beta} = c_{\alpha\beta} - a^{\sigma\gamma} b_{\sigma\gamma} b_{\alpha\beta}. \tag{1.5.106}$$

Define the quantity

$$H = \frac{1}{2} a^{\sigma\gamma} b_{\sigma\gamma} \tag{1.5.107}$$

as the mean curvature of the surface, then the equation (1.5.106) can be written in the form

$$c_{\alpha\beta} - 2H\, b_{\alpha\beta} + K\, a_{\alpha\beta} = 0. \tag{1.5.108}$$

By multiplying the equation (1.5.108) by $du^\alpha du^\beta$ and summing, we find

$$C - 2H\, B + K\, A = 0 \tag{1.5.109}$$

is a relation connecting the first, second and third fundamental forms.

EXAMPLE 1.5-2

In a two dimensional space the Riemann Christoffel tensor has only one nonzero independent component R_{1212}. (See Exercise 1.5, problem number 21.) Consequently, the equation (1.5.104) can be written in the form $K\sqrt{a}e_{12}\sqrt{a}e_{12} = b_{22}b_{11} - b_{21}b_{12}$ and solving for the Gaussian curvature K we find

$$K = \frac{b_{22}b_{11} - b_{12}b_{21}}{a_{11}a_{22} - a_{12}a_{21}} = \frac{b}{a} = \frac{R_{1212}}{a}. \tag{1.5.110}$$

■

Surface Curvature

For a surface curve $u^\alpha = u^\alpha(s)$,$\alpha = 1, 2$ lying upon a surface $x^i = x^i(u^1, u^2)$,$i = 1, 2, 3$, we have a two dimensional space embedded in a three dimensional space. Thus, if $t^\alpha = \dfrac{du^\alpha}{ds}$ is a unit tangent vector to the surface curve then $a_{\alpha\beta}\dfrac{du^\alpha}{ds}\dfrac{du^\beta}{ds} = a_{\alpha\beta}t^\alpha t^\beta = 1$. This same vector can be represented as the unit tangent vector to the space curve $x^i = x^i(u^1(s), u^2(s))$ with $T^i = \dfrac{dx^i}{ds}$. That is we will have $g_{ij}\dfrac{dx^i}{ds}\dfrac{dx^j}{ds} = g_{ij}T^iT^j = 1$. The surface vector t^α and the space vector T^i are related by

$$T^i = \frac{\partial x^i}{\partial u^\alpha}\frac{du^\alpha}{ds} = x^i_\alpha t^\alpha. \tag{1.5.111}$$

The surface vector t^α is a unit vector so that $a_{\alpha\beta}t^\alpha t^\beta = 1$. If we differentiate this equation intrinsically with respect to the parameter s, we find that $a_{\alpha\beta}t^\alpha \frac{\delta t^\beta}{\delta s} = 0$. This shows that the surface vector $\frac{\delta t^\alpha}{\delta s}$ is perpendicular to the surface vector t^α. Let u^α denote a unit normal vector in the surface plane which is orthogonal to the tangent vector t^α. The direction of u^α is selected such that $\epsilon_{\alpha\beta}t^\alpha u^\beta = 1$. Therefore, there exists a scalar $\kappa_{(g)}$ such that

$$\frac{\delta t^\alpha}{\delta s} = \kappa_{(g)} u^\alpha \tag{1.5.112}$$

where $\kappa_{(g)}$ is called the geodesic curvature of the curve. In a similar manner it can be shown that $\frac{\delta u^\alpha}{\delta s}$ is a surface vector orthogonal to t^α. Let $\frac{\delta u^\alpha}{\delta s} = \alpha t^\alpha$ where α is a scalar constant to be determined. By differentiating the relation $a_{\alpha\beta}t^\alpha u^\beta = 0$ intrinsically and simplifying we find that $\alpha = -\kappa_{(g)}$ and therefore

$$\frac{\delta u^\alpha}{\delta s} = -\kappa_{(g)} t^\alpha. \tag{1.5.113}$$

The equations (1.5.112) and (1.5.113) are sometimes referred to as the Frenet-Serret formula for a curve relative to a surface.

Taking the intrinsic derivative of equation (1.5.111), with respect to the parameter s, we find that

$$\frac{\delta T^i}{\delta s} = x^i_\alpha \frac{\delta t^\alpha}{\delta s} + x^i_{\alpha,\beta}\frac{du^\beta}{ds} t^\alpha. \tag{1.5.114}$$

Treating the curve as a space curve we use the Frenet formulas (1.5.13). If we treat the curve as a surface curve, then we use the Frenet formulas (1.5.112) and (1.5.113). In this way the equation (1.5.114) can be written in the form

$$\kappa N^i = x^i_\alpha \kappa_{(g)} u^\alpha + x^i_{\alpha,\beta} t^\beta t^\alpha. \tag{1.5.115}$$

By using the results from equation (1.5.71) in equation (1.5.115) we obtain

$$\kappa N^i = \kappa_{(g)} u^i + b_{\alpha\beta} n^i t^\alpha t^\beta \tag{1.5.116}$$

where u^i is the space vector counterpart of the surface vector u^α. Let θ denote the angle between the surface normal n^i and the principal normal N^i, then we have that $\cos\theta = n_i N^i$. Hence, by multiplying the equation (1.5.116) by n_i we obtain

$$\kappa \cos\theta = b_{\alpha\beta} t^\alpha t^\beta. \tag{1.5.117}$$

Consequently, for all curves on the surface with the same tangent vector t^α, the quantity $\kappa\cos\theta$ will remain constant. This result is known as Meusnier's theorem. Note also that $\kappa\cos\theta = \kappa_{(n)}$ is the normal component of the curvature and $\kappa\sin\theta = \kappa_{(g)}$ is the geodesic component of the curvature. Therefore, we write the equation (1.5.117) as

$$\kappa_{(n)} = b_{\alpha\beta} t^\alpha t^\beta \tag{1.5.118}$$

which represents the normal curvature of the surface in the direction t^α. The equation (1.5.118) can also be written in the form

$$\kappa_{(n)} = b_{\alpha\beta}\frac{du^\alpha}{ds}\frac{du^\beta}{ds} = \frac{B}{A} \tag{1.5.119}$$

which is a ratio of quadratic forms.

The surface directions for which $\kappa_{(n)}$ has a maximum or minimum value is determined from the equation (1.5.119) which is written as

$$(b_{\alpha\beta} - \kappa_{(n)} a_{\alpha\beta})\lambda^\alpha \lambda^\beta = 0. \tag{1.5.120}$$

The direction giving a maximum or minimum value to $\kappa_{(n)}$ must then satisfy

$$(b_{\alpha\beta} - \kappa_{(n)} a_{\alpha\beta})\lambda^\beta = 0 \tag{1.5.121}$$

so that $\kappa_{(n)}$ must be a root of the determinant equation

$$det(b_{\alpha\beta} - \kappa_{(n)} a_{\alpha\beta}) = 0. \tag{1.5.122}$$

The expanded form of equation (1.5.122) can be written as

$$\kappa_{(n)}^2 - a^{\alpha\beta} b_{\alpha\beta} \kappa_{(n)} + \frac{b}{a} = 0 \tag{1.5.123}$$

where $a = a_{11}a_{22} - a_{12}a_{21}$ and $b = b_{11}b_{22} - b_{12}b_{21}$. Using the definition given in equation (1.5.107) and using the result from equation (1.5.110), the equation (1.5.123) can be expressed in the form

$$\kappa_{(n)}^2 - 2H\,\kappa_{(n)} + K = 0. \tag{1.5.124}$$

The roots $\kappa_{(1)}$ and $\kappa_{(2)}$ of the equation (1.5.124) then satisfy the relations

$$H = \frac{1}{2}(\kappa_{(1)} + \kappa_{(2)}) \tag{1.5.125}$$

and

$$K = \kappa_{(1)}\kappa_{(2)}. \tag{1.5.126}$$

Here H is the mean value of the principal curvatures and K is the Gaussian or total curvature which is the product of the principal curvatures. It is readily verified that

$$H = \frac{Eg - 2fF + eG}{2(EG - F^2)} \quad \text{and} \quad K = \frac{eg - f^2}{EG - F^2}$$

are invariants obtained from the surface metric and curvature tensor.

Relativity

Sir Isaac Newton and Albert Einstein viewed the world differently when it came to describing gravity and the motion of the planets. In this brief introduction to relativity we will compare the Newtonian equations with the relativistic equations in describing planetary motion. We begin with an examination of Newtonian systems.

Newton's viewpoint of planetary motion is a multiple bodied problem, but for simplicity we consider only a two body problem, say the sun and some planet where the motion takes place in a plane. Newton's law of gravitation states that two masses m and M are attracted toward each other with a force of magnitude $\frac{GmM}{\rho^2}$, where G is a constant, ρ is the distance between the masses, m is the mass of the planet and M is the mass of the sun. One can construct an x, y plane containing the two masses with the origin located at the center of mass of the sun. Let $\widehat{\mathbf{e}}_\rho = \cos\phi\,\widehat{\mathbf{e}}_1 + \sin\phi\,\widehat{\mathbf{e}}_2$ denote a unit vector at the origin of this coordinate system and pointing in the direction of the mass m. The vector force of attraction of mass M on mass m is given by the relation

$$\vec{F} = \frac{-GmM}{\rho^2}\,\widehat{\mathbf{e}}_\rho. \tag{1.5.127}$$

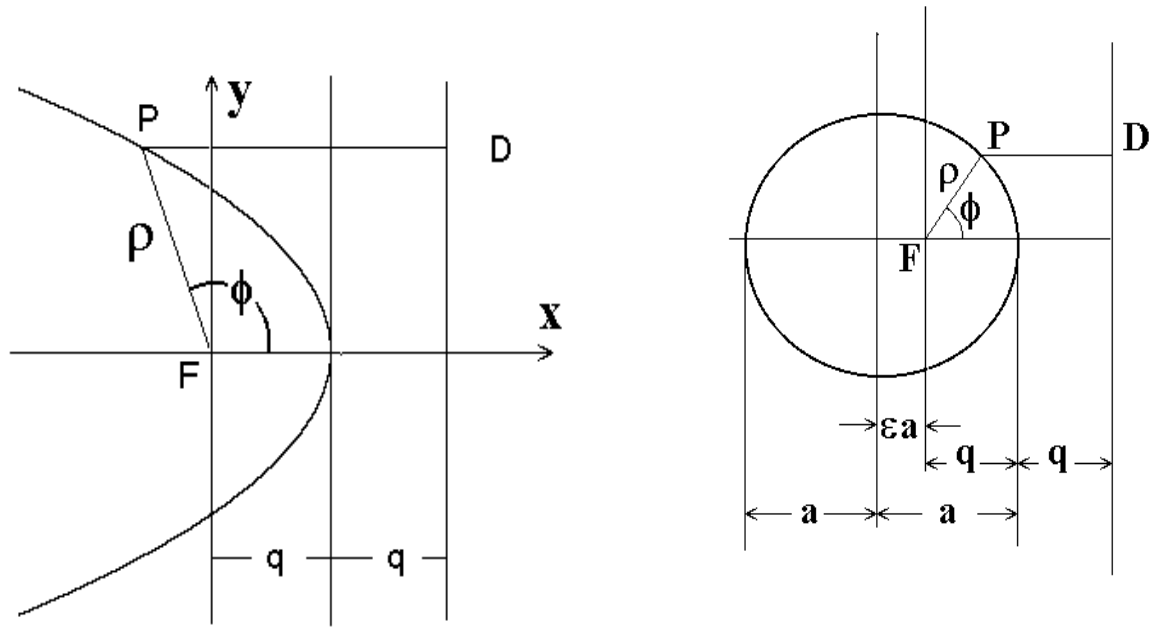

Figure 1.5-2. Parabolic and elliptic conic sections

The equation of motion of mass m with respect to mass M is obtained from Newton's second law. Let $\vec{\rho} = \rho\,\widehat{\mathbf{e}}_\rho$ denote the position vector of mass m with respect to the origin. Newton's second law can then be written in any of the forms

$$\vec{F} = \frac{-GmM}{\rho^2}\,\widehat{\mathbf{e}}_\rho = m\frac{d^2\vec{\rho}}{dt^2} = m\frac{d\vec{V}}{dt} = \frac{-GmM}{\rho^3}\vec{\rho} \tag{1.5.128}$$

and from this equation we can show that the motion of the mass m can be described as a conic section.

Recall that a conic section is defined as a locus of points $p(x, y)$ such that the distance of p from a fixed point (or points), called a focus (foci), is proportional to the distance of the point p from a fixed line, called a directrix, that does not contain the fixed point. The constant of proportionality is called the eccentricity and is denoted by the symbol ϵ. For $\epsilon = 1$ a parabola results; for $0 \le \epsilon \le 1$ an ellipse results; for $\epsilon > 1$ a hyperbola results; and if $\epsilon = 0$ the conic section is a circle.

With reference to figure 1.5-2, a conic section is defined in terms of the ratio $\frac{\overline{FP}}{\overline{PD}} = \epsilon$ where $\overline{FP} = \rho$ and $\overline{PD} = 2q - \rho\cos\phi$. From the ϵ ratio we solve for ρ and obtain the polar representation for the conic section

$$\rho = \frac{p}{1 + \epsilon\cos\phi} \tag{1.5.129}$$

where $p = 2q\epsilon$ and the angle ϕ is known as the true anomaly associated with the orbit. The quantity p is called the semi-parameter of the conic section. (Note that when $\phi = \frac{\pi}{2}$, then $\rho = p$.) A more general form of the above equation is

$$\rho = \frac{p}{1 + \epsilon\cos(\phi - \phi_0)} \quad \text{or} \quad u = \frac{1}{\rho} = A[1 + \epsilon\cos(\phi - \phi_0)], \tag{1.5.130}$$

where ϕ_0 is an arbitrary starting anomaly. An additional symbol a, known as the semi-major axes of an elliptical orbit can be introduced where q, p, ϵ, a are related by

$$\frac{p}{1+\epsilon} = q = a(1-\epsilon) \qquad \text{or} \quad p = a(1-\epsilon^2). \tag{1.5.131}$$

To show that the equation (1.5.128) produces a conic section for the motion of mass m with respect to mass M we will show that one form of the solution of equation (1.5.128) is given by the equation (1.5.129). To verify this we use the following vector identities:

$$\begin{aligned} \vec{\rho} \times \widehat{\mathbf{e}}_\rho &= 0 \\ \frac{d}{dt}\left(\vec{\rho} \times \frac{d\vec{\rho}}{dt}\right) &= \vec{\rho} \times \frac{d^2\vec{\rho}}{dt^2} \\ \widehat{\mathbf{e}}_\rho \cdot \frac{d\widehat{\mathbf{e}}_\rho}{dt} &= 0 \\ \widehat{\mathbf{e}}_\rho \times \left(\widehat{\mathbf{e}}_\rho \times \frac{d\widehat{\mathbf{e}}_\rho}{dt}\right) &= -\frac{d\widehat{\mathbf{e}}_\rho}{dt}. \end{aligned} \tag{1.5.132}$$

From the equation (1.5.128) we find that

$$\frac{d}{dt}\left(\vec{\rho} \times \frac{d\vec{\rho}}{dt}\right) = \vec{\rho} \times \frac{d^2\vec{\rho}}{dt^2} = -\frac{GM}{\rho^2}\vec{\rho} \times \widehat{\mathbf{e}}_\rho = \vec{0} \tag{1.5.133}$$

so that an integration of equation (1.5.133) produces

$$\vec{\rho} \times \frac{d\vec{\rho}}{dt} = \vec{h} = \text{constant}. \tag{1.5.134}$$

The quantity $\vec{H} = \vec{\rho} \times m\vec{V} = \vec{\rho} \times m\frac{d\vec{\rho}}{dt}$ is the angular momentum of the mass m so that the quantity $\vec{h}$ represents the angular momentum per unit mass. The equation (1.5.134) tells us that $\vec{h}$ is a constant for our two body system. Note that because $\vec{h}$ is constant we have

$$\begin{aligned} \frac{d}{dt}\left(\vec{V} \times \vec{h}\right) = \frac{d\vec{V}}{dt} \times \vec{h} &= -\frac{GM}{\rho^2}\widehat{\mathbf{e}}_\rho \times \left(\vec{\rho} \times \frac{d\vec{\rho}}{dt}\right) \\ &= -\frac{GM}{\rho^2}\widehat{\mathbf{e}}_\rho \times [\vec{\rho}\widehat{\mathbf{e}}_\rho \times (\rho\frac{d\widehat{\mathbf{e}}_\rho}{dt} + \frac{d\rho}{dt}\widehat{\mathbf{e}}_\rho)] \\ &= -\frac{GM}{\rho^2}\widehat{\mathbf{e}}_\rho \times (\widehat{\mathbf{e}}_\rho \times \frac{d\widehat{\mathbf{e}}_\rho}{dt})\rho^2 = GM\frac{d\widehat{\mathbf{e}}_\rho}{dt} \end{aligned}$$

and consequently an integration produces

$$\vec{V} \times \vec{h} = GM\,\widehat{\mathbf{e}}_\rho + \vec{C}$$

where $\vec{C}$ is a vector constant of integration. The triple scalar product formula gives us

$$\vec{\rho}\cdot(\vec{V}\times\vec{h}) = \vec{h}\cdot(\vec{\rho}\times\frac{d\vec{\rho}}{dt}) = h^2 = GM\vec{\rho}\cdot\,\widehat{\mathbf{e}}_\rho + \vec{\rho}\cdot\vec{C}$$

or

$$h^2 = GM\rho + C\rho\cos\phi \tag{1.5.135}$$

where ϕ is the angle between the vectors $\vec{C}$ and $\vec{\rho}$. From the equation (1.5.135) we find that

$$\rho = \frac{p}{1+\epsilon\cos\phi} \tag{1.5.136}$$

where $p = h^2/GM$ and $\epsilon = C/GM$. This result is known as Kepler's first law and implies that when $\epsilon < 1$ the mass m describes an elliptical orbit with the sun at one focus.

We present now an alternate derivation of equation (1.5.130) for later use. From the equation (1.5.128) we have

$$2\frac{d\vec{\rho}}{dt}\cdot\frac{d^2\vec{\rho}}{dt^2} = \frac{d}{dt}\left(\frac{d\vec{\rho}}{dt}\cdot\frac{d\vec{\rho}}{dt}\right) = -2\frac{GM}{\rho^3}\vec{\rho}\cdot\frac{d\vec{\rho}}{dt} = -\frac{GM}{\rho^3}\frac{d}{dt}\left(\vec{\rho}\cdot\vec{\rho}\right). \tag{1.5.137}$$

Consider the equation (1.5.137) in spherical coordinates ρ,θ,ϕ. The tensor velocity components are $V^1 = \frac{d\rho}{dt}$, $V^2 = \frac{d\theta}{dt}$, $V^3 = \frac{d\phi}{dt}$ and the physical components of velocity are given by $V_\rho = \frac{d\rho}{dt}$, $V_\theta = \rho\frac{d\theta}{dt}$, $V_\phi = \rho\sin\theta\frac{d\phi}{dt}$ so that the velocity can be written

$$\vec{V} = \frac{d\vec{\rho}}{dt} = \frac{d\rho}{dt}\,\widehat{\mathbf{e}}_\rho + \rho\frac{d\theta}{dt}\,\widehat{\mathbf{e}}_\theta + \rho\sin\theta\frac{d\phi}{dt}\,\widehat{\mathbf{e}}_\phi. \tag{1.5.138}$$

Substituting equation (1.5.138) into equation (1.5.137) gives the result

$$\frac{d}{dt}\left[\left(\frac{d\rho}{dt}\right)^2 + \rho^2\left(\frac{d\theta}{dt}\right)^2 + \rho^2\sin^2\theta\left(\frac{d\phi}{dt}\right)^2\right] = -\frac{GM}{\rho^3}\frac{d}{dt}(\rho^2) = -\frac{2GM}{\rho^2}\frac{d\rho}{dt} = 2GM\frac{d}{dt}\left(\frac{1}{\rho}\right)$$

which can be integrated directly to give

$$\left(\frac{d\rho}{dt}\right)^2 + \rho^2\left(\frac{d\theta}{dt}\right)^2 + \rho^2\sin^2\theta\left(\frac{d\phi}{dt}\right)^2 = \frac{2GM}{\rho} - E \tag{1.5.139}$$

where $-E$ is a constant of integration. In the special case of a planar orbit we set $\theta = \frac{\pi}{2}$ constant so that the equation (1.5.139) reduces to

$$\begin{aligned}\left(\frac{d\rho}{dt}\right)^2 + \rho^2\left(\frac{d\phi}{dt}\right)^2 &= \frac{2GM}{\rho} - E\\ \left(\frac{d\rho}{d\phi}\frac{d\phi}{dt}\right)^2 + \rho^2\left(\frac{d\phi}{dt}\right)^2 &= \frac{2GM}{\rho} - E.\end{aligned} \tag{1.5.140}$$

Also for this special case of planar motion we have

$$|\vec{\rho}\times\frac{d\vec{\rho}}{dt}| = \rho^2\frac{d\phi}{dt} = h. \tag{1.5.141}$$

By eliminating $\frac{d\phi}{dt}$ from the equation (1.5.140) we obtain the result

$$\left(\frac{d\rho}{d\phi}\right)^2 + \rho^2 = \frac{2GM}{h^2}\rho^3 - \frac{E}{h^2}\rho^4. \tag{1.5.142}$$

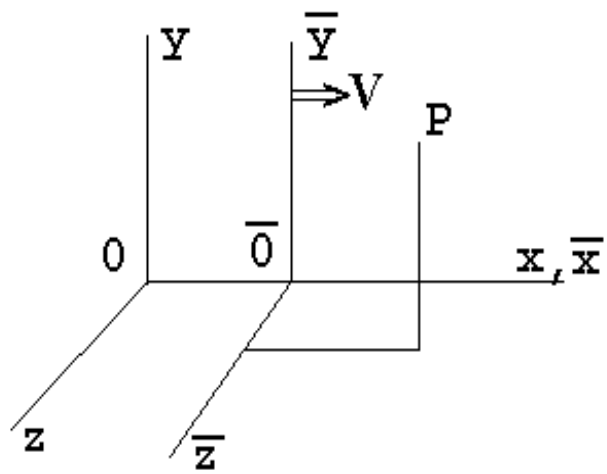

Figure 1.5-3. Relative motion of two inertial systems.

The substitution $\rho = \frac{1}{u}$ can be used to represent the equation (1.5.142) in the form

$$\left(\frac{du}{d\phi}\right)^2 + u^2 - \frac{2GM}{h^2}u + \frac{E}{h^2} = 0 \tag{1.5.143}$$

which is a form we will return to later in this section. Note that we can separate the variables in equations (1.5.142) or (1.5.143). The results can then be integrate to produce the equation (1.5.130).

Newton also considered the relative motion of two inertial systems, say S and $\overline{S}$. Consider two such systems as depicted in the figure 1.5-3 where the $\overline{S}$ system is moving in the $x-$direction with speed v relative to the system S.

For a Newtonian system, if at time $t = 0$ we have clocks in both systems which coincide, than at time t a point $P(\overline{x}, \overline{y}, \overline{z})$ in the $\overline{S}$ system can be described by the transformation equations

$$\begin{aligned} x &= \overline{x} + v\overline{t} & & \overline{x} &= x - vt \\ y &= \overline{y} & \text{or} & \overline{y} &= y \\ z &= \overline{z} & & \overline{z} &= z \\ t &= \overline{t} & & \overline{t} &= t. \end{aligned} \tag{1.5.144}$$

These are the transformation equation of Newton's relativity sometimes referred to as a Galilean transformation.

Before Einstein the principle of relativity required that velocities be additive and obey Galileo's velocity addition rule

$$V_{P/R} = V_{P/Q} + V_{Q/R}. \tag{1.5.145}$$

That is, the velocity of P with respect to R equals the velocity of P with respect to Q plus the velocity of Q with respect to R. For example, a person (P) running north at 3 km/hr on a train (Q) moving north at 60 km/hr with respect to the ground (R) has a velocity of 63 km/hr with respect to the ground. What happens when (P) is a light wave moving on a train (Q) which is moving with velocity V relative to the ground? Are the velocities still additive? This type of question led to the famous Michelson-Morley experiment which has been labeled as the starting point for relativity. Einstein's answer to the above question was "NO" and required that $V_{P/R} = V_{P/Q} = c =$speed of light be a universal constant.

In contrast to the Newtonian equations, Einstein considered the motion of light from the origins 0 and $\overline{0}$ of the systems S and $\overline{S}$. If the $\overline{S}$ system moves with velocity v relative to the S system and at time $t = 0$ a light signal is sent from the S system to the $\overline{S}$ system, then this light signal will move out in a spherical wave front and lie on the sphere

$$x^2 + y^2 + z^2 = c^2t^2 \tag{1.5.146}$$

where c is the speed of light. Conversely, if a light signal is sent out from the $\overline{S}$ system at time $\overline{t} = 0$, it will lie on the spherical wave front

$$\overline{x}^2 + \overline{y}^2 + \overline{z}^2 = c^2\overline{t}^2. \tag{1.5.147}$$

Observe that the Newtonian equations (1.5.144) do not satisfy the equations (1.5.146) and (1.5.147) identically. If $y = \overline{y}$ and $z = \overline{z}$ then the space variables $(x, \overline{x})$ and time variables $(t, \overline{t})$ must somehow be related. Einstein suggested the following transformation equations between these variables

$$\overline{x} = \gamma(x - vt) \quad \text{and} \quad x = \gamma(\overline{x} + v\overline{t}) \tag{1.5.148}$$

where γ is a constant to be determined. The differentials of equations (1.5.148) produce

$$d\overline{x} = \gamma(dx - vdt) \quad \text{and} \quad dx = \gamma(d\overline{x} + vd\overline{t}) \tag{1.5.149}$$

from which we obtain the ratios

$$\frac{d\overline{x}}{\gamma(d\overline{x} + v\,d\overline{t})} = \frac{\gamma(dx - v\,dt)}{dx} \quad \text{or} \quad \frac{1}{\gamma(1 + \frac{v}{\frac{d\overline{x}}{d\overline{t}}})} = \gamma(1 - \frac{v}{\frac{dx}{dt}}). \tag{1.5.150}$$

When $\dfrac{d\overline{x}}{d\overline{t}} = \dfrac{dx}{dt} = c$, the speed of light, the equation (1.5.150) requires that

$$\gamma^2 = (1 - \frac{v^2}{c^2})^{-1} \quad \text{or} \quad \gamma = (1 - \frac{v^2}{c^2})^{-1/2}. \tag{1.5.151}$$

From the equations (1.5.148) we eliminate $\overline{x}$ and find

$$\overline{t} = \gamma(t - \frac{v}{c^2}x). \tag{1.5.152}$$

We can now replace the Newtonian equations (1.5.144) by the relativistic transformation equations

$$\begin{aligned} x &= \gamma(\overline{x} + v\overline{t}) & & & \overline{x} &= \gamma(x - vt) \\ y &= \overline{y} & & & \overline{y} &= y \\ z &= \overline{z} & & \text{or} & \overline{z} &= z \\ t &= \gamma(\overline{t} + \frac{v}{c^2}\overline{x}) & & & \overline{t} &= \gamma(t - \frac{v}{c^2}x) \end{aligned} \tag{1.5.153}$$

where γ is given by equation (1.5.151). These equations are also known as the Lorentz transformation. Note that for $v << c$, then $\frac{v}{c^2} \approx 0$, $\gamma \approx 1$, then the equations (1.5.153) closely approximate the equations (1.5.144). The equations (1.5.153) also satisfy the equations (1.5.146) and (1.5.147) identically as can be readily verified by substitution. Further, by using chain rule differentiation we obtain from the relations (1.5.148) that

$$\frac{dx}{dt} = \frac{\frac{d\overline{x}}{d\overline{t}} + v}{1 + \frac{\frac{d\overline{x}}{d\overline{t}}}{c}\frac{v}{c}}. \tag{1.5.154}$$

The equation (1.5.154) is the Einstein relative velocity addition rule which replaces the previous Newtonian rule given by equation (1.5.145). We can rewrite equation (1.5.154) in the notation of equation (1.5.145) as

$$V_{P/R} = \frac{V_{P/Q} + V_{Q/R}}{1 + \frac{V_{P/Q}}{c}\frac{V_{Q/R}}{c}}. \tag{1.5.155}$$

Observe that when $V_{P/Q} << c$ and $V_{Q/R} << c$ then equation (1.5.155) approximates closely the equation (1.5.145). Also as $V_{P/Q}$ and $V_{Q/R}$ approach the speed of light we have

$$\lim_{\substack{V_{P/Q} \to C \\ V_{Q/R} \to C}} \frac{V_{P/Q} + V_{Q/R}}{1 + \frac{V_{P/Q}}{c}\frac{V_{Q/R}}{c}} = c \tag{1.5.156}$$

which agrees with Einstein's hypothesis that the speed of light is an invariant.

Let us return now to the viewpoint of what gravitation is. Einstein thought of space and time as being related and viewed the motion of the planets as being that of geodesic paths in a space-time continuum. Recall the equations of geodesics are given by

$$\frac{d^2x^i}{ds^2} + \left\{ \begin{matrix} i \\ j\,k \end{matrix} \right\} \frac{dx^j}{ds}\frac{dx^k}{ds} = 0, \tag{1.5.157}$$

where s is arc length. These equations are to be associated with a 4-dimensional space-time metric g_{ij} where the indices i, j take on the values $1, 2, 3, 4$ and the x^i are generalized coordinates. Einstein asked the question, "Can one introduce a space-time metric g_{ij} such that the equations (1.5.157) can somehow reproduce the law of gravitational attraction $\frac{d^2\vec{\rho}}{dt^2} + \frac{GM}{\rho^3}\vec{\rho} = 0$?" Then the motion of the planets can be viewed as optimized motion in a space-time continuum where the metrices of the space simulate the law of gravitational attraction. Einstein thought that this motion should be related to the curvature of the space which can be obtained from the Riemann-Christoffel tensor R^i_{jkl}. The metric we desire g_{ij}, $i, j = 1, 2, 3, 4$ has 16 components. The conjugate metric tensor g^{ij} is defined such that $g^{ij}g_{jk} = \delta^i_k$ and an element of arc length squared is given by $ds^2 = g_{ij}dx^i dx^j$. Einstein thought that the metrices should come from the Riemann-Christoffel curvature tensor which, for $n = 4$ has 256 components, but only 20 of these are linearly independent. This seems like a large number of equations from which to obtain the law of gravitational attraction and so Einstein considered the contracted tensor

$$G_{ij} = R^t_{ijt} = \frac{\partial}{\partial x^j}\left\{ \begin{matrix} n \\ i\,n \end{matrix} \right\} - \frac{\partial}{\partial x^n}\left\{ \begin{matrix} n \\ i\,j \end{matrix} \right\} + \left\{ \begin{matrix} m \\ i\,n \end{matrix} \right\}\left\{ \begin{matrix} n \\ m\,j \end{matrix} \right\} - \left\{ \begin{matrix} m \\ i\,j \end{matrix} \right\}\left\{ \begin{matrix} n \\ m\,n \end{matrix} \right\}. \tag{1.5.158}$$

Spherical coordinates (ρ, θ, ϕ) suggests a metric similar to

$$ds^2 = -(d\rho)^2 - \rho^2(d\theta)^2 - \rho^2\sin^2\theta(d\phi)^2 + c^2(dt)^2$$

where $g_{11} = -1$, $g_{22} = -\rho^2$, $g_{33} = -\rho^2 \sin^2\theta$, $g_{44} = c^2$ and $g_{ij} = 0$ for $i \neq j$. The negative signs are introduced so that $\left(\frac{ds}{dt}\right)^2 = c^2 - v^2$ is positive when $v < c$ and the velocity is not greater than c. However, this metric will not work since the curvature tensor vanishes. The spherical symmetry of the problem suggest that g_{11} and g_{44} change while g_{22} and g_{33} remain fixed. Let $(x^1, x^2, x^3, x^4) = (\rho, \theta, \phi, t)$ and assume

$$g_{11} = -e^u, \quad g_{22} = -\rho^2, \quad g_{33} = -\rho^2 \sin^2\theta, \quad g_{44} = e^v \tag{1.5.159}$$

where u and v are unknown functions of ρ to be determined. This gives the conjugate metric tensor

$$g^{11} = -e^{-u}, \quad g^{22} = \frac{-1}{\rho^2}, \quad g^{33} = \frac{-1}{\rho^2 \sin^2\theta}, \quad g^{44} = e^{-v} \tag{1.5.160}$$

and $g^{ij} = 0$ for $i \neq j$. This choice of a metric produces

$$ds^2 = -e^u (d\rho)^2 - \rho^2 (d\theta)^2 - \rho^2 \sin^2\theta (d\phi)^2 + e^v (dt)^2 \tag{1.5.161}$$

together with the nonzero Christoffel symbols

$$\begin{aligned}
&\left\{ {1 \atop 1\,1} \right\} = \frac{1}{2}\frac{du}{d\rho} && \left\{ {2 \atop 1\,2} \right\} = \frac{1}{\rho} && \left\{ {3 \atop 1\,3} \right\} = \frac{1}{\rho} && \\
&\left\{ {1 \atop 2\,2} \right\} = -\rho e^{-u} && \left\{ {2 \atop 2\,1} \right\} = \frac{1}{\rho} && \left\{ {3 \atop 2\,3} \right\} = \frac{\cos\theta}{\sin\theta} && \left\{ {4 \atop 1\,4} \right\} = \frac{1}{2}\frac{dv}{d\rho} \\
&\left\{ {1 \atop 3\,3} \right\} = -\rho e^{-u} \sin^2\theta && \left\{ {2 \atop 3\,3} \right\} = -\sin\theta\cos\theta && \left\{ {3 \atop 3\,1} \right\} = \frac{1}{\rho} && \left\{ {4 \atop 4\,1} \right\} = \frac{1}{2}\frac{dv}{d\rho}. \\
&\left\{ {1 \atop 4\,4} \right\} = \frac{1}{2} e^{v-u} \frac{dv}{dr} && && \left\{ {3 \atop 3\,2} \right\} = \frac{\cos\theta}{\sin\theta} &&
\end{aligned} \tag{1.5.162}$$

The equation (1.5.158) is used to calculate the nonzero G_{ij} and we find that

$$\begin{aligned}
G_{11} =& \frac{1}{2}\frac{d^2v}{d\rho^2} + \frac{1}{4}\left(\frac{dv}{d\rho}\right)^2 - \frac{1}{4}\frac{du}{d\rho}\frac{dv}{d\rho} - \frac{1}{\rho}\frac{du}{d\rho} \\
G_{22} =& e^{-u}\left(1 + \frac{1}{2}\rho\frac{dv}{d\rho} - \frac{1}{2}\rho\frac{du}{d\rho} - e^u\right) \\
G_{33} =& e^{-u}\left(1 + \frac{1}{2}\rho\frac{dv}{d\rho} - \frac{1}{2}\rho\frac{du}{d\rho} - e^u\right)\sin^2\theta \\
G_{44} =& -e^{v-u}\left(\frac{1}{2}\frac{d^2v}{d\rho^2} - \frac{1}{4}\frac{du}{d\rho}\frac{dv}{d\rho} + \frac{1}{4}\left(\frac{dv}{d\rho}\right)^2 + \frac{1}{\rho}\frac{dv}{d\rho}\right)
\end{aligned} \tag{1.5.163}$$

and $G_{ij} = 0$ for $i \neq j$. The assumption that $G_{ij} = 0$ for all i, j leads to the differential equations

$$\begin{aligned}
\frac{d^2v}{d\rho^2} + \frac{1}{2}\left(\frac{dv}{d\rho}\right)^2 - \frac{1}{2}\frac{du}{d\rho}\frac{dv}{d\rho} - \frac{2}{\rho}\frac{du}{d\rho} =& 0 \\
1 + \frac{1}{2}\rho\frac{dv}{d\rho} - \frac{1}{2}\rho\frac{du}{d\rho} - e^u =& 0 \\
\frac{d^2v}{d\rho^2} + \frac{1}{2}\left(\frac{dv}{d\rho}\right)^2 - \frac{1}{2}\frac{du}{d\rho}\frac{dv}{d\rho} + \frac{2}{\rho}\frac{dv}{d\rho} =& 0.
\end{aligned} \tag{1.5.164}$$

Subtracting the first equation from the third equation gives

$$\frac{du}{d\rho} + \frac{dv}{d\rho} = 0 \quad \text{or} \quad u + v = c_1 = \text{constant}. \tag{1.5.165}$$

The second equation in (1.5.164) then becomes

$$\rho \frac{du}{d\rho} = 1 - e^u \tag{1.5.166}$$

Separate the variables in equation (1.5.166) and integrate to obtain the result

$$e^u = \frac{1}{1 - \frac{c_2}{\rho}} \tag{1.5.167}$$

where c_2 is a constant of integration and consequently

$$e^v = e^{c_1 - u} = e^{c_1}\left(1 - \frac{c_2}{\rho}\right). \tag{1.5.168}$$

The constant c_1 is selected such that g_{44} approaches c^2 as ρ increases without bound. This produces the metrices

$$g_{11} = \frac{-1}{1 - \frac{c_2}{\rho}}, \quad g_{22} = -\rho^2, \quad g_{33} = -\rho^2 \sin^2\theta, \quad g_{44} = c^2(1 - \frac{c_2}{\rho}) \tag{1.5.169}$$

where c_2 is a constant still to be determined. The metrices given by equation (1.5.169) are now used to expand the equations (1.5.157) representing the geodesics in this four dimensional space. The differential equations representing the geodesics are found to be

$$\frac{d^2\rho}{ds^2} + \frac{1}{2}\frac{du}{d\rho}\left(\frac{d\rho}{ds}\right)^2 - \rho e^{-u}\left(\frac{d\theta}{ds}\right)^2 - \rho e^{-u}\sin^2\theta\left(\frac{d\phi}{ds}\right)^2 + \frac{1}{2}e^{v-u}\frac{dv}{d\rho}\left(\frac{dt}{ds}\right)^2 = 0 \tag{1.5.170}$$

$$\frac{d^2\theta}{ds^2} + \frac{2}{\rho}\frac{d\theta}{ds}\frac{d\rho}{ds} - \sin\theta\cos\theta\left(\frac{d\phi}{ds}\right)^2 = 0 \tag{1.5.171}$$

$$\frac{d^2\phi}{ds^2} + \frac{2}{\rho}\frac{d\phi}{ds}\frac{d\rho}{ds} + 2\frac{\cos\theta}{\sin\theta}\frac{d\phi}{ds}\frac{d\theta}{ds} = 0 \tag{1.5.172}$$

$$\frac{d^2t}{ds^2} + \frac{dv}{d\rho}\frac{dt}{ds}\frac{d\rho}{ds} = 0. \tag{1.5.173}$$

The equation (1.5.171) is identically satisfied if we examine planar orbits where $\theta = \frac{\pi}{2}$ is a constant. This value of θ also simplifies the equations (1.5.170) and (1.5.172). The equation (1.5.172) becomes an exact differential equation

$$\frac{d}{ds}\left(\rho^2\frac{d\phi}{ds}\right) = 0 \quad \text{or} \quad \rho^2\frac{d\phi}{ds} = c_4, \tag{1.5.174}$$

and the equation (1.5.173) also becomes an exact differential

$$\frac{d}{ds}\left(\frac{dt}{ds}e^v\right) = 0 \quad \text{or} \quad \frac{dt}{ds}e^v = c_5, \tag{1.5.175}$$

where c_4 and c_5 are constants of integration. This leaves the equation (1.5.170) which determines ρ. Substituting the results from equations (1.5.174) and (1.5.175), together with the relation (1.5.161), the equation (1.5.170) reduces to

$$\frac{d^2\rho}{ds^2} + \frac{c_2}{2\rho^2} + \frac{c_2 c_4^2}{2\rho^4} - (1 - \frac{c_2}{\rho})\frac{c_4^2}{\rho^3} = 0. \tag{1.5.176}$$

By the chain rule we have

$$\frac{d^2\rho}{ds^2} = \frac{d^2\rho}{d\phi^2}\left(\frac{d\phi}{ds}\right)^2 + \frac{d\rho}{d\phi}\frac{d^2\phi}{ds^2} = \frac{d^2\rho}{d\phi^2}\frac{c_4^2}{\rho^4} + \left(\frac{d\rho}{d\phi}\right)^2\left(\frac{-2c_4^2}{\rho^5}\right)$$

and so equation (1.5.176) can be written in the form

$$\frac{d^2\rho}{d\phi^2} - \frac{2}{\rho}\left(\frac{d\rho}{d\phi}\right)^2 + \frac{c_2}{2}\frac{\rho^2}{c_4^2} + \frac{c_2}{2} - \left(1 - \frac{c_2}{\rho}\right)\rho = 0. \tag{1.5.177}$$

The substitution $\rho = \frac{1}{u}$ reduces the equation (1.5.177) to the form

$$\frac{d^2u}{d\phi^2} + u - \frac{c_2}{2c_4^2} = \frac{3}{2}c_2u^2. \tag{1.5.178}$$

Multiply the equation (1.5.178) by $2\frac{du}{d\phi}$ and integrate with respect to ϕ to obtain

$$\left(\frac{du}{d\phi}\right)^2 + u^2 - \frac{c_2}{c_4^2}u = c_2u^3 + c_6. \tag{1.5.179}$$

where c_6 is a constant of integration. To determine the constant c_6 we write the equation (1.5.161) in the special case $\theta = \frac{\pi}{2}$ and use the substitutions from the equations (1.5.174) and (1.5.175) to obtain

$$e^u\left(\frac{d\rho}{ds}\right)^2 = e^u\left(\frac{d\rho}{d\phi}\frac{d\phi}{ds}\right)^2 = 1 - \rho^2\left(\frac{d\phi}{ds}\right)^2 + e^v\left(\frac{dt}{ds}\right)^2$$

or

$$\left(\frac{d\rho}{d\phi}\right)^2 + \left(1 - \frac{c_2}{\rho}\right)\rho^2 + \left(1 - \frac{c_2}{\rho} - \frac{c_5^2}{c^2}\right)\frac{\rho^4}{c_4^2} = 0. \tag{1.5.180}$$

The substitution $\rho = \frac{1}{u}$ reduces the equation (1.5.180) to the form

$$\left(\frac{du}{d\phi}\right)^2 + u^2 - c_2u^3 + \frac{1}{c_4^2} - \frac{c_2}{c_4^2}u - \frac{c_5^2}{c^2c_4^2} = 0. \tag{1.5.181}$$

Now comparing the equations (1.5.181) and (1.5.179) we select

$$c_6 = \left(\frac{c_5^2}{c^2} - 1\right)\frac{1}{c_4^2}$$

so that the equation (1.5.179) takes on the form

$$\left(\frac{du}{d\phi}\right)^2 + u^2 - \frac{c_2}{c_4^2}u + \left(1 - \frac{c_5^2}{c^2}\right)\frac{1}{c_4^2} = c_2u^3 \tag{1.5.182}$$

Now we can compare our relativistic equation (1.5.182) with our Newtonian equation (1.5.143). In order that the two equations almost agree we select the constants c_2, c_4, c_5 so that

$$\frac{c_2}{c_4^2} = \frac{2GM}{h^2} \quad \text{and} \quad \frac{1 - \frac{c_5^2}{c^2}}{c_4^2} = \frac{E}{h^2}. \tag{1.5.183}$$

The equations (1.5.183) are only two equations in three unknowns and so we use the additional equation

$$\lim_{\rho\to\infty}\rho^2\frac{d\phi}{dt} = \lim_{\rho\to\infty}\rho^2\frac{d\phi}{ds}\frac{ds}{dt} = h \tag{1.5.184}$$

which is obtained from equation (1.5.141). Substituting equations (1.5.174) and (1.5.175) into equation (1.5.184), rearranging terms and taking the limit we find that

$$\frac{c_4 c^2}{c_5} = h. \tag{1.5.185}$$

From equations (1.5.183) and (1.5.185) we obtain the results that

$$c_5^2 = \frac{c^2}{1+\frac{E}{c^2}}, \quad c_2 = \frac{2GM}{c^2}\left(\frac{1}{1+E/c^2}\right), \quad c_4 = \frac{h}{c\sqrt{1+E/c^2}} \tag{1.5.186}$$

These values substituted into equation (1.5.181) produce the differential equation

$$\left(\frac{du}{d\phi}\right)^2 + u^2 - \frac{2GM}{h^2}u + \frac{E}{h^2} = \frac{2GM}{c^2}\left(\frac{1}{1+E/c^2}\right)u^3. \tag{1.5.187}$$

Let $\alpha = \frac{c_2}{c_4^2} = \frac{2GM}{h^2}$ and $\beta = c_2 = \frac{2GM}{c^2}(\frac{1}{1+E/c^2})$ then the differential equation (1.5.178) can be written as

$$\frac{d^2u}{d\phi^2} + u - \frac{\alpha}{2} = \frac{3}{2}\beta u^2. \tag{1.5.188}$$

We know the solution to equation (1.5.143) is given by

$$u = \frac{1}{\rho} = A(1+\epsilon\cos(\phi-\phi_0)) \tag{1.5.189}$$

and so we assume a solution to equation (1.5.188) of this same general form. We know that A is small and so we make the assumption that the solution of equation (1.5.188) given by equation (1.5.189) is such that ϕ_0 is approximately constant and varies slowly as a function of $A\phi$. Observe that if $\phi_0 = \phi_0(A\phi)$, then $\frac{d\phi_0}{d\phi} = \phi_0' A$ and $\frac{d^2\phi_0}{d\phi^2} = \phi_0'' A^2$, where primes denote differentiation with respect to the argument of the function. (i.e. $A\phi$ for this problem.) The derivatives of equation (1.5.189) produce

$$\begin{aligned}
\frac{du}{d\phi} &= -\epsilon A\sin(\phi-\phi_0)(1-\phi_0' A) \\
\frac{d^2u}{d\phi^2} &= \epsilon A^3\sin(\phi-\phi_0)\phi_0'' - \epsilon A\cos(\phi-\phi_0)(1-2A\phi_0' + A^2(\phi_0')^2) \\
&= -\epsilon A\cos(\phi-\phi_0) + 2\epsilon A^2\phi_0'\cos(\phi-\phi_0) + O(A^3).
\end{aligned}$$

Substituting these derivatives into the differential equation (1.5.188) produces the equations

$$2\epsilon A^2\phi_0'\cos(\phi-\phi_0) + A - \frac{\alpha}{2} = \frac{3\beta}{2}\left(A^2 + 2\epsilon A^2\cos(\phi-\phi_0) + \epsilon^2 A^2\cos^2(\phi-\phi_0)\right) + O(A^3).$$

Now A is small so that terms $O(A^3)$ can be neglected. Equating the constant terms and the coefficient of the $\cos(\phi-\phi_0)$ terms we obtain the equations

$$A - \frac{\alpha}{2} = \frac{3\beta}{2}A^2 \qquad\qquad 2\epsilon A^2\phi_0' = 3\beta\epsilon A^2 + \frac{3\beta}{2}\epsilon^2 A^2\cos(\phi-\phi_0).$$

Treating ϕ_0 as essentially constant, the above system has the approximate solutions

$$A \approx \frac{\alpha}{2} \qquad\qquad \phi_0 \approx \frac{3\beta}{2}A\phi + \frac{3\beta}{4}A\epsilon\sin(\phi-\phi_0) \tag{1.5.190}$$

The solutions given by equations (1.5.190) tells us that ϕ_0 varies slowly with time. For ϵ less than 1, the elliptical motion is affected by this change in ϕ_0. It causes the semi-major axis of the ellipse to slowly rotate at a rate given by $\frac{d\phi_0}{dt}$. Using the following values for the planet Mercury

$$\begin{aligned}
G =& 6.67(10^{-8})\,\text{dyne}\,\text{cm}^2/\text{g}^2 \\
M =& 1.99(10^{33})\,\text{g} \\
a =& 5.78(10^{12})\,\text{cm} \\
\epsilon =& 0.206 \\
c =& 3(10^{10})\,\text{cm/sec} \\
\beta \approx& \frac{2GM}{c^2} = 2.95(10^5)\,\text{cm} \\
h \approx& \sqrt{GMa(1-\epsilon^2)} = 2.71(10^{19})\,\text{cm}^2/\text{sec} \\
\frac{d\phi}{dt} \approx& \left(\frac{GM}{a^3}\right)^{1/2} \text{sec}^{-1}\,\text{Kepler's third law}
\end{aligned} \tag{1.5.191}$$

we calculate the slow rate of rotation of the semi-major axis to be approximately

$$\begin{aligned}
\frac{d\phi_0}{dt} = \frac{d\phi_0}{d\phi}\frac{d\phi}{dt} \approx \frac{3}{2}\beta A\frac{d\phi}{dt} \approx 3\left(\frac{GM}{ch}\right)^2\left(\frac{GM}{a^3}\right)^{1/2} =& 6.628(10^{-14})\,\text{rad/sec} \\
=& 43.01 \quad \text{seconds of arc per century.}
\end{aligned} \tag{1.5.192}$$

This slow variation in Mercury's semi-major axis has been observed and measured and is in agreement with the above value. Newtonian mechanics could not account for the changes in Mercury's semi-major axis, but Einstein's theory of relativity does give this prediction. The resulting solution of equation (1.5.188) can be viewed as being caused by the curvature of the space-time continuum.

The contracted curvature tensor G_{ij} set equal to zero is just one of many conditions that can be assumed in order to arrive at a metric for the space-time continuum. Any assumption on the value of G_{ij} relates to imposing some kind of curvature on the space. Within the large expanse of our universe only our imaginations limit us as to how space, time and matter interact. You can also imagine the existence of other tensor metrics in higher dimensional spaces where the geodesics within the space-time continuum give rise to the motion of other physical quantities.

This short introduction to relativity is concluded with a quote from the NASA News@hg.nasa.gov news release, spring 1998, Release:98-51. "An international team of NASA and university researchers has found the first direct evidence of a phenomenon predicted 80 years ago using Einstein's theory of general relativity– that the Earth is dragging space and time around itself as it rotates."The news release explains that the effect is known as frame dragging and goes on to say "Frame dragging is like what happens if a bowling ball spins in a thick fluid such as molasses. As the ball spins, it pulls the molasses around itself. Anything stuck in the molasses will also move around the ball. Similarly, as the Earth rotates it pulls space-time in its vicinity around itself. This will shift the orbits of satellites near the Earth."This research is reported in the journal Science.

EXERCISE 1.5

▶ **1.** Let $\kappa = \frac{\delta \vec{T}}{\delta s} \cdot \vec{N}$ and $\tau = \frac{\delta \vec{N}}{\delta s} \cdot \vec{B}$. Assume in turn that each of the intrinsic derivatives of $\vec{T}, \vec{N}, \vec{B}$ are some linear combination of $\vec{T}, \vec{N}, \vec{B}$ and hence derive the Frenet-Serret formulas of differential geometry.

▶ **2.** Determine the given surfaces. Describe and sketch the curvilinear coordinates upon each surface.

(a) $\vec{r}(u,v) = u\,\widehat{\mathbf{e}}_1 + v\,\widehat{\mathbf{e}}_2$ $\quad (b)$ $\vec{r}(u,v) = u\cos v\,\widehat{\mathbf{e}}_1 + u\sin v\,\widehat{\mathbf{e}}_2$ $\quad (c)$ $\vec{r}(u,v) = \dfrac{2uv^2}{u^2+v^2}\,\widehat{\mathbf{e}}_1 + \dfrac{2u^2v}{u^2+v^2}\,\widehat{\mathbf{e}}_2.$

▶ **3.** Determine the given surfaces and describe the curvilinear coordinates upon the surface. Use some graphics package to plot the surface and illustrate the coordinate curves on the surface. Find element of area dS in terms of u and v.

(a) $\vec{r}(u,v) = a\sin u\cos v\,\widehat{\mathbf{e}}_1 + b\sin u\sin v\,\widehat{\mathbf{e}}_2 + c\cos u\,\widehat{\mathbf{e}}_3$ $\quad a,b,c$ constants $\quad 0 \le u, v \le 2\pi$

(b) $\vec{r}(u,v) = (4 + v\sin\frac{u}{2})\cos u\,\widehat{\mathbf{e}}_1 + (4 + v\sin\frac{u}{2})\sin u\,\widehat{\mathbf{e}}_2 + v\cos\frac{u}{2}\,\widehat{\mathbf{e}}_3$ $\quad -1 \le v \le 1, \quad 0 \le u \le 2\pi$

(c) $\vec{r}(u,v) = au\cos v\,\widehat{\mathbf{e}}_1 + bu\sin v\,\widehat{\mathbf{e}}_2 + cu\,\widehat{\mathbf{e}}_3$

(d) $\vec{r}(u,v) = u\cos v\,\widehat{\mathbf{e}}_1 + u\sin v\,\widehat{\mathbf{e}}_2 + \alpha v\,\widehat{\mathbf{e}}_3$ $\quad \alpha$ constant

(e) $\vec{r}(u,v) = a\cos v\,\widehat{\mathbf{e}}_1 + b\sin v\,\widehat{\mathbf{e}}_2 + u\,\widehat{\mathbf{e}}_3$ $\quad a,b$ constant

(f) $\vec{r}(u,v) = u\cos v\,\widehat{\mathbf{e}}_1 + u\sin v\,\widehat{\mathbf{e}}_2 + u^2\,\widehat{\mathbf{e}}_3$

▶ **4.** Consider a two dimensional space with metric tensor $(a_{\alpha\beta}) = \begin{pmatrix} E & F \\ F & G \end{pmatrix}$. Assume that the surface is described by equations of the form $y^i = y^i(u,v)$ and that any point on the surface is given by the position vector $\vec{r} = \vec{r}(u,v) = y^i\,\widehat{\mathbf{e}}_i$. Show that the metrices E, F, G are functions of the parameters u, v and are given by

$$E = \vec{r}_u \cdot \vec{r}_u, \qquad F = \vec{r}_u \cdot \vec{r}_v, \quad G = \vec{r}_v \cdot \vec{r}_v \quad \text{where} \quad \vec{r}_u = \frac{\partial \vec{r}}{\partial u} \quad \text{and} \quad \vec{r}_v = \frac{\partial \vec{r}}{\partial v}.$$

▶ **5.** For the metric given in problem 4 show that the Christoffel symbols of the first kind are given by

$$[1\,1,1] = \vec{r}_u \cdot \vec{r}_{uu} \qquad [1\,2,1] = [2\,1,1] = \vec{r}_u \cdot \vec{r}_{uv} \qquad [2\,2,1] = \vec{r}_u \cdot \vec{r}_{vv}$$
$$[1\,1,2] = \vec{r}_v \cdot \vec{r}_{uu} \qquad [1\,2,2] = [2\,1,2] = \vec{r}_v \cdot \vec{r}_{uv} \qquad [2\,2,2] = \vec{r}_v \cdot \vec{r}_{vv}$$

which can be represented $[\alpha\,\beta,\gamma] = \dfrac{\partial^2 \vec{r}}{\partial u^\alpha \partial u^\beta} \cdot \dfrac{\partial \vec{r}}{\partial u^\gamma}, \quad \alpha,\beta,\gamma = 1,2.$

▶ **6.** Show that the results in problem 5 can also be written in the form

$$[1\,1,1] = \frac{1}{2}E_u \qquad [1\,2,1] = [2\,1,1] = \frac{1}{2}E_v \qquad [2\,2,1] = F_v - \frac{1}{2}G_u$$
$$[1\,1,2] = F_u - \frac{1}{2}E_v \qquad [1\,2,2] = [2\,1,2] = \frac{1}{2}G_u \qquad [2\,2,2] = \frac{1}{2}G_v$$

where the subscripts indicate partial differentiation.

▶ **7.** For the metric given in problem 4, show that the Christoffel symbols of the second kind can be expressed in the form $\left\{ \begin{matrix} \gamma \\ \alpha\,\beta \end{matrix} \right\} = a^{\gamma\delta}[\alpha\,\beta,\delta], \qquad \alpha,\beta,\gamma = 1,2$ and produce the results

$$\left\{ \begin{matrix} 1 \\ 1\,1 \end{matrix} \right\} = \frac{GE_u - 2FF_u + FE_v}{2(EG - F^2)} \qquad \left\{ \begin{matrix} 1 \\ 1\,2 \end{matrix} \right\} = \left\{ \begin{matrix} 1 \\ 2\,1 \end{matrix} \right\} = \frac{GE_v - FG_u}{2(EG - F^2)} \qquad \left\{ \begin{matrix} 2 \\ 1\,1 \end{matrix} \right\} = \frac{2EF_u - EE_v - FE_u}{2(EG - F^2)}$$
$$\left\{ \begin{matrix} 1 \\ 2\,2 \end{matrix} \right\} = \frac{2GF_v - GG_u - FG_v}{2(EG - F^2)} \qquad \left\{ \begin{matrix} 2 \\ 1\,2 \end{matrix} \right\} = \left\{ \begin{matrix} 2 \\ 2\,1 \end{matrix} \right\} = \frac{EG_u - FE_v}{2(EG - F^2)} \qquad \left\{ \begin{matrix} 2 \\ 2\,2 \end{matrix} \right\} = \frac{EG_v - 2FF_v + FG_u}{2(EG - F^2)}$$

where the subscripts indicate partial differentiation.

▶ **8.** Derive the Gauss equations by assuming that

$$\vec{r}_{uu} = c_1\vec{r}_u + c_2\vec{r}_v + c_3\widehat{n}, \qquad \vec{r}_{uv} = c_4\vec{r}_u + c_5\vec{r}_v + c_6\widehat{n}, \qquad \vec{r}_{vv} = c_7\vec{r}_u + c_8\vec{r}_v + c_9\widehat{n}$$

where $c_1, \ldots, c_9$ are constants determined by taking dot products of the above vectors with the vectors $\vec{r}_u, \vec{r}_v$, and $\widehat{n}$. Show that $c_1 = \left\{ \begin{matrix} 1 \\ 1\,1 \end{matrix} \right\}$, $c_2 = \left\{ \begin{matrix} 2 \\ 1\,1 \end{matrix} \right\}$, $c_3 = e$, $c_4 = \left\{ \begin{matrix} 1 \\ 1\,2 \end{matrix} \right\}$, $c_5 = \left\{ \begin{matrix} 2 \\ 1\,2 \end{matrix} \right\}$, $c_6 = f$, $c_7 = \left\{ \begin{matrix} 1 \\ 2\,2 \end{matrix} \right\}$, $c_8 = \left\{ \begin{matrix} 2 \\ 2\,2 \end{matrix} \right\}$, $c_9 = g$ Show the Gauss equations can be written $\dfrac{\partial^2 \vec{r}}{\partial u^\alpha \partial u^\beta} = \left\{ \begin{matrix} \gamma \\ \alpha\,\beta \end{matrix} \right\} \dfrac{\partial \vec{r}}{\partial u^\gamma} + b_{\alpha\beta}\widehat{n}$.

▶ **9.** Derive the Weingarten equations

$$\begin{aligned} \widehat{n}_u &= c_1\vec{r}_u + c_2\vec{r}_v \\ \widehat{n}_v &= c_3\vec{r}_u + c_4\vec{r}_v \end{aligned} \qquad \text{and} \qquad \begin{aligned} \vec{r}_u &= c_1^*\widehat{n}_u + c_2^*\widehat{n}_v \\ \vec{r}_v &= c_3^*\widehat{n}_u + c_4^*\widehat{n}_v \end{aligned}$$

and show

$$\begin{aligned} c_1 &= \frac{fF - eG}{EG - F^2} & c_3 &= \frac{gF - fG}{EG - F^2} & c_1^* &= \frac{fF - gE}{eg - f^2} & c_3^* &= \frac{fG - gF}{eg - f^2} \\ c_2 &= \frac{eF - fE}{EG - F^2} & c_4 &= \frac{fF - gE}{EG - F^2} & c_2^* &= \frac{fE - eF}{eg - f^2} & c_4^* &= \frac{fF - eG}{eg - f^2} \end{aligned}$$

The constants in the above equations are determined in a manner similar to that suggested in problem 8. Show that the Weingarten equations can be written in the form

$$\frac{\partial \widehat{n}}{\partial u^\alpha} = -b_\alpha^\beta \frac{\partial \vec{r}}{\partial u^\beta}.$$

▶ **10.** Using $\widehat{n} = \dfrac{\vec{r}_u \times \vec{r}_v}{\sqrt{EG - F^2}}$, the results from exercise 1.1, problem 9(a), and the results from problem 5, verify that

$$\begin{aligned} (\vec{r}_u \times \vec{r}_{uu}) \cdot \widehat{n} &= \left\{ \begin{matrix} 2 \\ 1\,1 \end{matrix} \right\} \sqrt{EG - F^2} & & \\ (\vec{r}_u \times \vec{r}_{uv}) \cdot \widehat{n} &= \left\{ \begin{matrix} 2 \\ 1\,2 \end{matrix} \right\} \sqrt{EG - F^2} & (\vec{r}_v \times \vec{r}_{uv}) \cdot \widehat{n} &= -\left\{ \begin{matrix} 1 \\ 2\,1 \end{matrix} \right\} \sqrt{EG - F^2} \\ (\vec{r}_v \times \vec{r}_{uu}) \cdot \widehat{n} &= -\left\{ \begin{matrix} 1 \\ 1\,1 \end{matrix} \right\} \sqrt{EG - F^2} & (\vec{r}_v \times \vec{r}_{vv}) \cdot \widehat{n} &= -\left\{ \begin{matrix} 1 \\ 2\,2 \end{matrix} \right\} \sqrt{EG - F^2} \\ (\vec{r}_u \times \vec{r}_{vv}) \cdot \widehat{n} &= \left\{ \begin{matrix} 2 \\ 2\,2 \end{matrix} \right\} \sqrt{EG - F^2} & (\vec{r}_u \times \vec{r}_v) \cdot \widehat{n} &= \sqrt{EG - F^2} \end{aligned}$$

and then derive the formula for the geodesic curvature given by equation (1.5.48).
Hint:$(\widehat{n} \times \vec{T}) \cdot \dfrac{d\vec{T}}{ds} = (\vec{T} \times \dfrac{d\vec{T}}{ds}) \cdot \widehat{n}$ and $a^{\alpha\delta}]\beta\gamma, \delta] = \left\{ \begin{matrix} \alpha \\ \beta\,\gamma \end{matrix} \right\}$.

▶ **11.** Verify the equation (1.5.39) which shows that the normal curvature directions are orthogonal. i.e. verify that $G\lambda_1\lambda_2 + F(\lambda_1 + \lambda_2) + E = 0$.

▶ **12.** Verify that $\delta^{\beta\gamma}_{\sigma\tau}\delta^{\omega\alpha}_{\lambda\nu}R_{\omega\alpha\beta\gamma} = 4R_{\lambda\nu\sigma\tau}$.

▶ **13.** Find the first fundamental form and unit normal to the surface defined by $z = f(x, y)$.

▶ **14.** Verify

$$A_{i,jk} - A_{i,kj} = A_\sigma R^\sigma_{.ijk}$$

where

$$R^\sigma_{.ijk} = \frac{\partial}{\partial x^j}\left\{ {\sigma \atop i\,k} \right\} - \frac{\partial}{\partial x^k}\left\{ {\sigma \atop i\,j} \right\} + \left\{ {n \atop i\,k} \right\}\left\{ {\sigma \atop n\,j} \right\} - \left\{ {n \atop i\,j} \right\}\left\{ {\sigma \atop n\,k} \right\}.$$

which is sometimes written

$$R_{injk} = \begin{vmatrix} \frac{\partial}{\partial x^j} & \frac{\partial}{\partial x^k} \\ [nj,k] & [nk,i] \end{vmatrix} + \begin{vmatrix} \left\{ {s \atop n\,j} \right\} & \left\{ {s \atop n\,k} \right\} \\ [ij,s] & [ik,s] \end{vmatrix}$$

▶ **15.** For $R_{ijkl} = g_{i\sigma}R^\sigma_{.jkl}$ show

$$R_{injk} = \frac{\partial}{\partial x^j}[nk,i] - \frac{\partial}{\partial x^k}[nj,i] + [ik,s]\left\{ {s \atop n\,j} \right\} - [ij,s]\left\{ {s \atop n\,k} \right\}$$

which is sometimes written

$$R^\sigma_{.ijk} = \begin{vmatrix} \frac{\partial}{\partial x^j} & \frac{\partial}{\partial x^k} \\ \left\{ {\sigma \atop i\,j} \right\} & \left\{ {\sigma \atop i\,k} \right\} \end{vmatrix} + \begin{vmatrix} \left\{ {n \atop i\,k} \right\} & \left\{ {n \atop i\,j} \right\} \\ \left\{ {\sigma \atop n\,k} \right\} & \left\{ {\sigma \atop n\,j} \right\} \end{vmatrix}$$

▶ **16.** Show

$$R_{ijkl} = \frac{1}{2}\left(\frac{\partial^2 g_{il}}{\partial x^j \partial x^k} - \frac{\partial^2 g_{jl}}{\partial x^i \partial x^k} - \frac{\partial^2 g_{ik}}{\partial x^j \partial x^l} + \frac{\partial^2 g_{jk}}{\partial x^i \partial x^l} \right) + g^{\alpha\beta}\left([jk,\beta][il,\alpha] - [jl,\beta][ik,\alpha]\right).$$

▶ **17.** Use the results from problem 15 to show

$$(i)\quad R_{jikl} = -R_{ijkl}, \qquad (ii)\quad R_{ijlk} = -R_{ijkl}, \qquad (iii)\quad R_{klij} = R_{ijkl}$$

Hence, the tensor R_{ijkl} is skew-symmetric in the indices i, j and k, l. Also the tensor R_{ijkl} is symmetric with respect to the (ij) and (kl) pair of indices.

▶ **18.** Verify the following cyclic properties of the Riemann Christoffel symbol:

$$\begin{aligned} (i)\quad & R_{nijk} + R_{njki} + R_{nkij} = 0 && \text{first index fixed} \\ (ii)\quad & R_{injk} + R_{jnki} + R_{knij} = 0 && \text{second index fixed} \\ (iii)\quad & R_{ijnk} + R_{jkni} + R_{kinj} = 0 && \text{third index fixed} \\ (iv)\quad & R_{ikjn} + R_{kjin} + R_{jikn} = 0 && \text{fourth index fixed} \end{aligned}$$

▶ **19.** By employing the results from the previous problems, show all components of the form: R_{iijk}, R_{injj}, R_{iijj}, R_{iiii}, (no summation on i or j) must be zero.

► **20.** Find the number of independent components associated with the Riemann Christoffel tensor $R_{ijkm}, \quad i,j,k,m = 1,2,\ldots,N$. There are N^4 components to examine in an $N-$dimensional space. Many of these components are zero and many of the nonzero components are related to one another by symmetries or the cyclic properties. Verify the following cases:

CASE I We examine components of the form $R_{inin}, \quad i \neq n$ with no summation of i or n. The first index can be chosen in N ways and therefore with $i \neq n$ the second index can be chosen in $N-1$ ways. Observe that $R_{inin} = R_{nini}, \quad$ (no summation on i or n) and so one half of the total combinations are repeated. This leaves $M_1 = \frac{1}{2}N(N-1)$ components of the form R_{inin}. The quantity M_1 can also be thought of as the number of distinct pairs of indices (i,n).

CASE II We next examine components of the form $R_{inji}, \quad i \neq n \neq j$ where there is no summation on the index i. We have previously shown that the first pair of indices can be chosen in M_1 ways. Therefore, the third index can be selected in $N-2$ ways and consequently there are $M_2 = \frac{1}{2}N(N-1)(N-2)$ distinct components of the form R_{inji} with $i \neq n \neq j$.

CASE III Next examine components of the form R_{injk} where $i \neq n \neq j \neq k$. From CASE I the first pairs of indices (i,n) can be chosen in M_1 ways. Taking into account symmetries, it can be shown that the second pair of indices can be chosen in $\frac{1}{2}(N-2)(N-3)$ ways. This implies that there are $\frac{1}{4}N(N-1)(N-2)(N-3)$ ways of choosing the indices i,n,j and k with $i \neq n \neq j \neq k$. By symmetry the pairs (i,n) and (j,k) can be interchanged and therefore only one half of these combinations are distinct. This leaves

$$\frac{1}{8}N(N-1)(N-2)(N-3)$$

distinct pairs of indices. Also from the cyclic relations we find that only two thirds of the above components are distinct. This produces

$$M_3 = \frac{N(N-1)(N-2)(N-3)}{12}$$

distinct components of the form R_{injk} with $i \neq n \neq j \neq k$.

Adding the above components from each case we find there are

$$M_4 = M_1 + M_2 + M_3 = \frac{N^2(N^2-1)}{12}$$

distinct and independent components.

Verify the entries in the following table:

Dimension of space N	1	2	3	4	5
Number of components N^4	1	16	81	256	625
$M_4 =$ Independent components of R_{ijkm}	0	1	6	20	50

Note 1: A one dimensional space can not be curved and all one dimensional spaces are Euclidean. (i.e. if we have an element of arc length squared given by $ds^2 = f(x)(dx)^2$, we can make the coordinate transformation $\sqrt{f(x)}dx = du$ and reduce the arc length squared to the form $ds^2 = du^2$.)

Note 2: In a two dimensional space, the indices can only take on the values 1 and 2. In this special case there are 16 possible components. It can be shown that the only nonvanishing components are:

$$R_{1212} = -R_{1221} = -R_{2112} = R_{2121}.$$

For these nonvanishing components only one independent component exists. By convention, the component R_{1212} is selected as the single independent component and all other nonzero components are expressed in terms of this component.

Find the nonvanishing independent components R_{ijkl} for $i, j, k, l = 1, 2, 3, 4$ and show that

$$\begin{array}{llll} R_{1212} & R_{3434} & R_{2142} & R_{4124} \\ R_{1313} & R_{1231} & R_{2342} & R_{4314} \\ R_{2323} & R_{1421} & R_{3213} & R_{4234} \\ R_{1414} & R_{1341} & R_{3243} & R_{1324} \\ R_{2424} & R_{2132} & R_{3143} & R_{1432} \end{array}$$

can be selected as the twenty independent components.

▶ **21.**

(a) For $N = 2$ show R_{1212} is the only nonzero independent component and $R_{1212} = R_{2121} = -R_{1221} = -R_{2112}$.

(b) Show that on the surface of a sphere of radius r_0 we have $R_{1212} = r_0^2 \sin^2\theta$.

▶ **22.** Show for $N = 2$ that

$$\overline{R}_{1212} = R_{1212} J^2 = R_{1212} \left| \frac{\partial x}{\partial \overline{x}} \right|^2$$

▶ **23.** Define $R_{ij} = R^s_{.ijs}$ as the Ricci tensor and $G^i_j = R^i_j - \frac{1}{2}\delta^i_j R$ as the Einstein tensor, where $R^i_j = g^{ik} R_{kj}$ and $R = R^i_i$. Show that

$$\begin{array}{ll} (a) & R_{jk} = g^{ab} R_{jabk} \\ (b) & R_{ij} = \dfrac{\partial^2 \log\sqrt{g}}{\partial x^i \partial x^j} - \left\{ \begin{matrix} b \\ i\,j \end{matrix} \right\} \dfrac{\partial \log\sqrt{g}}{\partial x^b} - \dfrac{\partial}{\partial x^a} \left\{ \begin{matrix} a \\ i\,j \end{matrix} \right\} + \left\{ \begin{matrix} b \\ i\,a \end{matrix} \right\} \left\{ \begin{matrix} a \\ j\,b \end{matrix} \right\} \\ (c) & R^i_{ijk} = 0 \end{array}$$

▶ **24.** By employing the results from the previous problem show that in the case $N = 2$ we have

$$\frac{R_{11}}{g_{11}} = \frac{R_{22}}{g_{22}} = \frac{R_{12}}{g_{12}} = -\frac{R_{1212}}{g}$$

where g is the determinant of g_{ij}.

▶ **25.** Consider the case $N = 2$ where we have $g_{12} = g_{21} = 0$ and show that

$$\begin{array}{llll} (a) & R_{12} = R_{21} = 0 & (c) & R = \dfrac{2R_{1221}}{g_{11} g_{22}} \\ (b) & R_{11} g_{22} = R_{22} g_{11} = R_{1221} & (d) & R_{ij} = \dfrac{1}{2} R g_{ij}, \quad \text{where} \quad R = g^{ij} R_{ij} \end{array}$$

The scalar invariant R is known as the Einstein curvature of the surface and the tensor $G^i_j = R^i_j - \frac{1}{2}\delta^i_j R$ is known as the Einstein tensor.

▶ **26.** For $N = 3$ show that $R_{1212}, R_{1313}, R_{2323}, R_{1213}, R_{2123}, R_{3132}$ are independent components of the Riemann Christoffel tensor.

▶ **27.** For $N = 2$ and $a_{\alpha\beta} = \begin{pmatrix} a_{11} & 0 \\ 0 & a_{22} \end{pmatrix}$ show that

$$K = \frac{R_{1212}}{a} = -\frac{1}{2\sqrt{a}}\left[\frac{\partial}{\partial u^1}\left(\frac{1}{\sqrt{a}}\frac{\partial a_{22}}{\partial u^1}\right) + \frac{\partial}{\partial u^2}\left(\frac{1}{\sqrt{a}}\frac{\partial a_{11}}{\partial u^2}\right)\right].$$

▶ **28.** For $N = 2$ and $a_{\alpha\beta} = \begin{pmatrix} a_{11} & a_{12} \\ a_{21} & a_{22} \end{pmatrix}$ show that

$$K = \frac{1}{2\sqrt{a}}\left\{\frac{\partial}{\partial u^1}\left[\frac{a_{12}}{a_{11}\sqrt{a}}\frac{\partial a_{11}}{\partial u^2} - \frac{1}{\sqrt{a}}\frac{\partial a_{22}}{\partial u^1}\right] + \frac{\partial}{\partial u^2}\left[\frac{2}{\sqrt{a}}\frac{\partial a_{12}}{\partial u^1} - \frac{1}{\sqrt{a}}\frac{\partial a_{11}}{\partial u^2} - \frac{a_{12}}{a_{11}\sqrt{a}}\frac{\partial a_{11}}{\partial u^1}\right]\right\}.$$

Check your results by setting $a_{12} = a_{21} = 0$ and comparing this answer with that given in the problem 27.

▶ **29.** Write out the Frenet-Serret formulas (1.5.112)(1.5.113) for surface curves in terms of Christoffel symbols of the second kind.

▶ **30.**

(a) Use the fact that for $n = 2$ we have $R_{1212} = R_{2121} = -R_{2112} = -R_{1221}$ together with $e_{\alpha\beta}$, $e^{\alpha\beta}$ the two dimensional alternating tensors to show that the equation (1.5.110) can be written as

$$R_{\alpha\beta\gamma\delta} = K\epsilon_{\alpha\beta}\epsilon_{\gamma\delta} \quad \text{where} \quad \epsilon_{\alpha\beta} = \sqrt{a}e_{\alpha\beta} \quad \text{and} \quad \epsilon^{\alpha\beta} = \frac{1}{\sqrt{a}}e^{\alpha\beta}$$

are the corresponding epsilon tensors.

(b) Show that from the result in part (a) we obtain $\frac{1}{4}R_{\alpha\beta\gamma\delta}\epsilon^{\alpha\beta}\epsilon^{\gamma\delta} = K$.
Hint: See equations (1.3.82),(1.5.93) and (1.5.94).

▶ **31.** Verify the result given by the equation (1.5.100).

▶ **32.** Show that $a^{\alpha\beta}c_{\alpha\beta} = 4H^2 - 2K$.

▶ **33.** Find equations for the principal curvatures associated with the surface

$$x = u, \qquad y = v, \qquad z = f(u, v).$$

▶ **34.** **Geodesics on a sphere** Let (θ, ϕ) denote the surface coordinates of the sphere of radius ρ defined by the parametric equations

$$x = \rho\sin\theta\cos\phi,\ y = \rho\sin\theta\sin\phi,\ z = \rho\cos\theta. \tag{1}$$

Consider also a plane which passes through the origin with normal having the direction numbers (n_1, n_2, n_3). This plane is represented by $n_1x + n_2y + n_3z = 0$ and intersects the sphere in a great circle which is described by the relation

$$n_1\sin\theta\cos\phi + n_2\sin\theta\sin\phi + n_3\cos\theta = 0. \tag{2}$$

This is an implicit relation between the surface coordinates θ, ϕ which describes the great circle lying on the sphere. We can write this later equation in the form

$$n_1\cos\phi + n_2\sin\phi = \frac{-n_3}{\tan\theta} \tag{3}$$

and in the special case where $n_1 = \cos\beta$, $n_2 = \sin\beta$,$n_3 = -\tan\alpha$ is expressible in the form

$$\cos(\phi - \beta) = \frac{\tan\alpha}{\tan\theta} \quad \text{or} \quad \phi - \beta = \cos^{-1}\left(\frac{\tan\alpha}{\tan\theta}\right). \tag{4}$$

The above equation defines an explicit relationship between the surface coordinates which defines a great circle on the sphere. The arc length squared relation satisfied by the surface coordinates together with the equation obtained by differentiating equation (4) with respect to arc length s gives the relations

$$\sin^2\theta \frac{d\phi}{ds} = \frac{\tan\alpha}{\sqrt{1 - \frac{\tan^2\alpha}{\tan^2\theta}}} \frac{d\theta}{ds} \tag{5}$$

$$ds^2 = \rho^2\, d\theta^2 + \rho^2\, \sin^2\theta\, d\phi^2 \tag{6}$$

The above equations (1)-(6) are needed to consider the following problem.

(a) Show that the differential equations defining the geodesics on the surface of a sphere (equations (1.5.51)) are

$$\frac{d^2\theta}{ds^2} - \sin\theta\cos\theta\left(\frac{d\phi}{ds}\right)^2 = 0 \tag{7}$$

$$\frac{d^2\phi}{ds^2} + 2\cot\theta \frac{d\theta}{ds}\frac{d\phi}{ds} = 0 \tag{8}$$

(b) Multiply equation (8) by $\sin^2\theta$ and integrate to obtain

$$\sin^2\theta\, \frac{d\phi}{ds} = c_1 \tag{9}$$

where c_1 is a constant of integration.

(c) Multiply equation (7) by $\frac{d\theta}{ds}$ and use the result of equation (9) to show that an integration produces

$$\left(\frac{d\theta}{ds}\right)^2 = \frac{-c_1^2}{\sin^2\theta} + c_2^2 \tag{10}$$

where c_2^2 is a constant of integration.

(d) Use the equations (5)(6) to show that $c_2 = 1/\rho$ and $c_1 = \frac{\sin\alpha}{\rho}$.

(e) Show that equations (9) and (10) imply that

$$\frac{d\phi}{d\theta} = \frac{\tan\alpha}{\tan^2\theta} \frac{\sec^2\theta}{\sqrt{1 - \frac{\tan^2\alpha}{\tan^2\theta}}}$$

and making the substitution $u = \frac{\tan\alpha}{\tan\theta}$ this equation can be integrated to obtain the equation (4). We can now expand the equation (4) and express the results in terms of x, y, z to obtain the equation (3). This produces a plane which intersects the sphere in a great circle. Consequently, the geodesics on a sphere are great circles.

▶ **35.** Find the differential equations defining the geodesics on the surface of a cylinder.

▶ **36.** Find the differential equations defining the geodesics on the surface of a torus. (See problem 13, Exercise 1.3)

▶ **37.** Find the differential equations defining the geodesics on the surface of revolution

$$x = r\cos\phi, \qquad y = r\sin\phi, \qquad z = f(r).$$

Note the curve $z = f(x)$ gives a profile of the surface. The curves $r =$ Constant are the parallels, while the curves $\phi =$ Constant are the meridians of the surface and

$$ds^2 = (1 + f'^2)\, dr^2 + r^2 d\phi^2.$$

▶ **38.** Find the unit normal and tangent plane to an arbitrary point on the right circular cone

$$x = u\sin\alpha\cos\phi, \qquad y = u\sin\alpha\sin\phi, \qquad z = u\cos\alpha.$$

This is a surface of revolution with $r = u\sin\alpha$ and $f(r) = r\cot\alpha$ with α constant.

▶ **39.** Let s denote arc length and assume the position vector $\vec{r}(s)$ is analytic about a point s_0. Show that the Taylor series $\vec{r}(s) = \vec{r}(s_0) + h\vec{r}\,'(s_0) + \dfrac{h^2}{2!}\vec{r}\,''(s_0) + \dfrac{h^3}{3!}\vec{r}\,'''(s_0) + \cdots$ about the point s_0, with $h = s - s_0$ is given by $\vec{r}(s) = \vec{r}(s_0) + h\vec{T} + \frac{1}{2}\kappa h^2\vec{N} + \frac{1}{6}h^3(-\kappa^2\vec{T} + \kappa'\vec{N} + \kappa\tau\vec{B}) + \cdots$ which is obtained by differentiating the Frenet formulas.

▶ **40.**

(a) Show that the circular helix defined by $x = a\cos t, \quad y = a\sin t, \quad z = bt$ with a, b constants, has the property that any tangent to the curve makes a constant angle with the line defining the z-axis. (i.e. $\vec{T}\cdot\widehat{\mathbf{e}}_3 = \cos\alpha =$ constant.)

(b) Show also that $\vec{N}\cdot\widehat{\mathbf{e}}_3 = 0$ and consequently $\widehat{\mathbf{e}}_3$ is parallel to the rectifying plane, which implies that $\widehat{\mathbf{e}}_3 = \vec{T}\cos\alpha + \vec{B}\sin\alpha$.

(c) Differentiate the result in part (b) and show that $\kappa/\tau = \tan\alpha$ is a constant.

▶ **41.** Consider a space curve $x_i = x_i(s)$ in Cartesian coordinates.

(a) Show that $\kappa = \left|\dfrac{d\vec{T}}{ds}\right| = \sqrt{x_i' x_i'}$

(b) Show that $\tau = \dfrac{1}{\kappa^2} e_{ijk} x_i' x_j'' x_k'''$. Hint: Consider $\vec{r}\,'\cdot\vec{r}\,''\times\vec{r}\,'''$

▶ **42.**

(a) Find the direction cosines of a normal to a surface $z = f(x, y)$.

(b) Find the direction cosines of a normal to a surface $F(x, y, z) = 0$.

(c) Find the direction cosines of a normal to a surface $x = x(u, v), y = y(u, v), z = z(u, v)$.

▶ **43.** Show that for a smooth surface $z = f(x, y)$ the Gaussian curvature at a point on the surface is given by

$$K = \frac{f_{xx}f_{yy} - f_{xy}^2}{(f_x^2 + f_y^2 + 1)^2}.$$

▶ **44.** Show that for a smooth surface $z = f(x, y)$ the mean curvature at a point on the surface is given by

$$H = \frac{(1 + f_y^2)f_{xx} - 2f_x f_y f_{xy} + (1 + f_x^2)f_{yy}}{2(f_x^2 + f_y^2 + 1)^{3/2}}.$$

▶ **45.** Express the Frenet-Serret formulas (1.5.13) in terms of Christoffel symbols of the second kind.

▶ **46.** Verify the relation (1.5.106).

▶ **47.** In V_n assume that $R_{ij} = \rho g_{ij}$ and show that $\rho = \frac{R}{n}$ where $R = g^{ij}R_{ij}$. This result is known as Einstein's gravitational equation at points where matter is present. It is analogous to the Poisson equation $\nabla^2 V = \rho$ from the Newtonian theory of gravitation.

▶ **48.** In V_n assume that $R_{ijkl} = K(g_{ik}g_{jl} - g_{il}g_{jk})$ and show that $R = Kn(1 - n)$. (Hint: See problem 23.)

▶ **49.** Assume $g_{ij} = 0$ for $i \neq j$ and verify the following.

(a) $R_{hijk} = 0$ for $h \neq i \neq j \neq k$

(b) $R_{hiik} = \sqrt{g_{ii}}\left(\dfrac{\partial^2\sqrt{g_{ii}}}{\partial x^h \partial x^k} - \dfrac{\partial\sqrt{g_{ii}}}{\partial x^h}\dfrac{\partial \log\sqrt{g_{hh}}}{\partial x^k} - \dfrac{\partial\sqrt{g_{ii}}}{\partial x^k}\dfrac{\partial \log\sqrt{g_{kk}}}{\partial x^h}\right)$ for h, i, k unequal.

(c) $R_{hiih} = \sqrt{g_{ii}}\sqrt{g_{hh}}\left[\dfrac{\partial}{\partial x^h}\left(\dfrac{1}{\sqrt{g_{hh}}}\dfrac{\partial\sqrt{g_{ii}}}{\partial x^h}\right) + \dfrac{\partial}{\partial x^i}\left(\dfrac{1}{\sqrt{g_{ii}}}\dfrac{\partial\sqrt{g_{hh}}}{\partial x^i}\right) + \sum\limits_{\substack{m=1\\ m\neq h\ \ m\neq i}}^{n}\dfrac{\partial\sqrt{g_{ii}}}{\partial x^m}\dfrac{\partial\sqrt{g_{hh}}}{\partial x^m}\right]$ where $h \neq i$.

▶ **50.** Consider a surface of revolution where $x = r\cos\theta$, $y = r\sin\theta$ and $z = f(r)$ is a given function of r.

(a) Show in this V_2 we have $ds^2 = (1 + (f')^2)dr^2 + r^2 d\theta^2$ where $' = \frac{d}{ds}$.

(b) Show the geodesic equations in this V_2 are

$$\frac{d^2r}{ds^2} + \frac{f'f''}{1 + (f')^2}\left(\frac{dr}{ds}\right)^2 - \frac{r}{1 + (f')^2}\left(\frac{d\theta}{ds}\right)^2 = 0$$
$$\frac{d^2\theta}{ds^2} + \frac{2}{r}\frac{d\theta}{ds}\frac{dr}{ds} = 0$$

(c) Solve the second equation in part (b) to obtain $\dfrac{d\theta}{ds} = \dfrac{a}{r^2}$. Substitute this result for ds in part (a) to show $d\theta = \pm\dfrac{a\sqrt{1 + (f')^2}}{r\sqrt{r^2 - a^2}}dr$ which theoretically can be integrated.